Behavioral and Brain Sciences
http://journals.cambridge.org/BBS

Additional services for ***Behavioral and Brain Sciences:***

Email alerts: Click here
Subscriptions: Click here
Commercial reprints: Click here
Terms of use : Click here

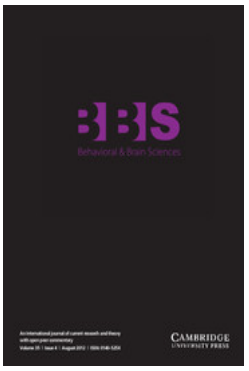

Research on self-control: An integrating framework

A. W. Logue

Behavioral and Brain Sciences / Volume 11 / Issue 04 / December 1988, pp 665 - 679
DOI: 10.1017/S0140525X00053978, Published online: 04 February 2010

Link to this article: http://journals.cambridge.org/abstract_S0140525X00053978

How to cite this article:
A. W. Logue (1988). Research on self-control: An integrating framework. Behavioral and Brain Sciences,11, pp 665-679 doi:10.1017/S0140525X00053978

Request Permissions : Click here

CAMBRIDGE JOURNALS

Downloaded from http://journals.cambridge.org/BBS, IP address: 144.173.6.37 on 10 Aug 2012

BEHAVIORAL AND BRAIN SCIENCES (1988) 11, 665–709
Printed in the United States of America

Research on self-control: An integrating framework

A. W. Logue
Department of Psychology, State University of New York at Stony Brook, Stony Brook, N.Y. 11794-2500

Abstract: The tendency to choose a larger, more delayed reinforcer over a smaller, less delayed one has frequently been termed "self-control." Three very different research traditions – two models emphasizing the control of local contingencies of reinforcement (Mischel's social learning theory and Herrnstein's matching law) and molar maximization models (specifically optimal foraging theory) – have all investigated behavior within the self-control paradigm. A framework is proposed to integrate research from all three research areas. This framework consists of three parts: a procedural analysis, a causal analysis, and a theoretical analysis. The procedural analysis provides a common procedural terminology for all three areas. The causal analysis establishes that, in all three research traditions, self-control varies directly with the current physical values of the reinforcers; that is, choices increase with reinforcer amount and decrease with reinforcer delay. But self-control also varies according to past events to which a subject has been exposed, and according to current factors other than the reinforcers. Each of the three models has therefore incorporated these indirect effects on self-control by postulating unobservable mechanisms. In all three cases, these mechanisms represent a subject's behavior as a function of a perceived environment. The theoretical analysis demonstrates that evolutionary theory can encompass the research from all three areas by considering differences in the adaptiveness of self-control in different situations. This integration provides a better and more predictive description of self-control.

Keywords: evolutionary theory; impulsiveness; matching law; optimal foraging theory; reinforcement; self-control

This target article concerns choices between larger, more delayed reinforcers and smaller, less delayed reinforcers. A choice of a larger, more delayed reinforcer over a smaller, less delayed reinforcer has frequently been termed *self-control* both in research with humans (e.g., Burns & Powers 1975; Navarick 1982) and in research with other species (e.g., Ainslie 1974; Eisenberger et al. 1982; Grosch & Neuringer 1981; Rachlin & Green 1972). These same researchers refer to a choice of a smaller, less delayed reinforcer over a larger, more delayed reinforcer as *impulsiveness*. In this sense, choosing a piece of cake available now over a whole cake available one month from now is an example of impulsiveness, whereas choosing the whole cake is an example of self-control. Self-control and impulsiveness as defined here are particular types of choice behavior.

The purpose of the present paper is to present a framework for integrating research on self-control arising from what at first appear to be several disparate scientific traditions: the cognitive, behavioral, biological, and economic sciences. Because there are both advantages and disadvantages to the definitions of self-control and impulsiveness described above, however, their use must first be justified.

1. Advantages and disadvantages of these definitions

The disadvantages are, first, that some researchers refer to the examination of the choices described above as the study of delay of gratification (see, e.g., W. Mischel 1981a). Research on delay of gratification and research on self-control may therefore seem more dissimilar than they actually are.

A second disadvantage is that the terms self-control and impulsiveness mean more to some researchers and people without research training than simply choices between larger, more delayed and smaller, less delayed reinforcers. For example, self-control has been used to describe situations in which a subject (a) persists with a repetitive task although faced with distraction (Patterson & W. Mischel 1975), (b) changes the subject's own behavior through changing the influences that regulate that behavior (i.e., self-reinforcement, see Goldfried & Merbaum 1973; Skinner 1953), (c) does not engage in behavior motivated by anger (Kagan 1984), or (d) tolerates aversive stimuli in return for a large reinforcer (Kanfer & Goldfoot 1966). Impulsiveness has been used to describe situations in which a subject responds quickly, and inaccurately, when several solutions to a problem are available (Kagan & Kogan 1970; Kagan et al. 1964). Although it is possible to redefine all of these indicators of self-control and impulsiveness as choices between larger, more delayed and smaller, less delayed reinforcers, the researchers who have formulated these other definitions may feel that the translation is inexact.

The last disadvantage is that the terms self-control and impulsiveness may increase anthropomorphism when used with nonhuman subjects. Although anthropomorphism should be avoided in any scientific pur-

© 1988 Cambridge University Press 0140-525X/88 $5.00+.00

suit, the use of a term relevant to an experimenter's personal experience can help to generate ideas for experiments. For example, self-control research has used pigeons to investigate the effects on self-control of "doing something else" (Grosch & Neuringer 1981; Logue & Pena-Correal 1984) and "fun thoughts" (Grosch & Neuringer 1981).

An advantage to using these definitions of self-control and impulsiveness is that they are operational, making them easy to use in the laboratory. In addition, both inside and outside the laboratory, the words self-control and impulsiveness provide a quick and simple way to refer to the types of choices of concern here.

Research on self-control as defined here can also contribute to many areas of laboratory research and vice versa. Note that two basic properties of reinforcers, reinforcer amount and reinforcer delay, are integral to this research. This means that work on self-control is relevant for studies as well as models of the effects of reinforcer amount and reinforcer delay, even though those studies and models are not specifically designated as relating to a self-control paradigm. Conversely, all choice research in which either reinforcer amount or reinforcer delay is varied is relevant to describing and predicting self-control. Research on memory, the effect of past events on current behavior (Catania 1984), is also relevant, including research on the effects of past events during the response-reinforcer delays.

A further advantage is that these definitions encompass behaviors frequently exhibited in nature. For example, some clinicians state that many clinical problems are self-control problems; that many clients seek therapy because they keep performing a behavior (such as yelling at their spouses) which has some immediate rewards, but which is not the best strategy in the long run (see, e.g., Goldfried & Merbaum 1973; Wilson & O'Leary 1980). Lack of self-control has also been used to explain criminality (Wilson & Herrnstein 1985), depression (Rehm 1984), and pain behavior (Ainslie 1987). Some of the most striking examples of self-control and impulsiveness in nature concern food selection. For instance, children or adults may have to decide whether to eat a candy bar now or dinner later. Another type of food choice that is prevalent among the members of many species is the choice about where to forage when one place is further away but has the better food source. Such a choice can become a question of survival when there is little overall food available to the individual making the choice (Logue 1986, Chap. 8).

The fact that these definitions allow self-control to be examined both in humans and other species carries two additional advantages. The first is a practical advantage. A particular research question may be investigated with whichever species appears the easiest to work with to obtain lawful, relevant data. The second advantage is that species differences in choice behavior, including any effects of human verbal behavior, can be examined within a self-control paradigm.

Finally, there is much variability both within and between individuals in the extent to which self-control and impulsiveness as defined here are shown. This is true not only for humans, but for nonhumans as well; individual variability has posed serious problems for quantitative investigations of self-control in the laboratory (see, e.g., Ainslie 1974; Millar & Navarick 1984; Navarick 1982; Solnick et al. 1980). The definitions therefore circumscribe a rich area in which to investigate the determinants of individual differences in choice behavior.

In summary, although self-control and impulsiveness may not be everyone's ideal terms for describing choices between larger, more delayed reinforcers and smaller, less delayed reinforcers, they are popular among many researchers, have operational definitions, suggest ideas for experiments, quickly summarize sometimes complex choice situations, are relevant to many research areas as well as to choices frequently encountered in nature, and encourage the investigation of species and individual differences. This target article will therefore use these terms exclusively, with self-control referring only to the choice of a larger, more delayed reinforcer over a smaller, less delayed reinforcer and impulsiveness referring to the opposite.

2. The framework

The framework consists of three parts: a procedural analysis, a causal analysis, and a theoretical analysis. Each reveals the similarities among different areas of research on self-control. I will first present the procedural analysis and then use it to classify models of self-control into two general types: local delay models and molar maximization models. This classification will be used in each of the two following subsections on the causes of self-control, namely, self-control when it is a direct function of the current physical values of the reinforcers, and self-control when it is not a direct function of the current physical values of the reinforcers. The effects that investigations of these two types of causes have had on the development of the two types of models will be discussed. In particular, the second type of cause emphasizes the need for formal models of self-control to incorporate past experience, as well as reinforcers of varying sizes and delays. For the theoretical analysis, I will suggest the use of evolutionary theory, considering which behavior is likely to maximize an individual's survival (especially to best prevent starvation) and predicting self-control or impulsiveness for a particular species or situation. (Inclusive fitness, Hamilton 1964a, 1964b, is the usual measure for current evolutionary models, but it can be approximated by individual survival, McNamara & Houston 1982, 1987.) In other words, evolutionary theory will be used as an overarching theory to encompass all of the self-control data and models. Finally, the conditions under which each model is most applicable will be delineated.

3. The procedural analysis

Consistent with the definitions of self-control and impulsiveness given above, any choice in a paradigm in which self-control is investigated can be characterized by the use of four distinct time periods. In Figure 1 (the self-control paradigm), given a particular choice i, there is a period of time during which choice responses are made (C_i). C_i is followed by a prereinforcer delay period (D_i, the time between the end of the choice period and the start of

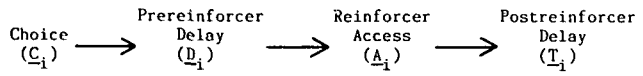

Figure 1. Time periods given a particular choice, *i*, in the self-control paradigm.

access to reinforcement) and then by a period of access to reinforcement (A_i). After A_i, there may or may not be a postreinforcer delay period (T_i, the time between the end of access to reinforcement and the start of the next C_i). Together, C_i, D_i, A_i, and T_i determine overall reinforcer frequency [F_i; $1/(C_i + D_i + A_i + T_i) = F_i$]. Hence if one of the four periods in Figure 1 is varied, F_i can only remain constant when there is a corresponding adjustment in another of the periods in Figure 1.

It should be apparent from Figure 1 that it is necessary to investigate whether or not each of the four time periods described, as well as F_i, affects self-control. Different models have concentrated on the effects of different time periods. These models can be classified into two broad categories: (1) local delay models, in which D_i but not T_i is assumed to be influential; and (2) global or molar maximization models, maximization of total received reinforcement, in which all time periods in Figure 1 are taken into account.

3.1. Local delay models

For local delay models, although the primary determinants of choice behavior in the self-control paradigm are assumed to be D_i and A_i, F_i may also affect choice so that there is some influence by a molar variable. However, C_i and T_i by themselves are not influential; hence subjects do not always respond so as to maximize total reinforcement over entire experimental sessions. Two major models of this type have been used to describe behavior in the self-control paradigm: Mischel's social learning theory (a qualitative model) and Herrnstein's matching law (a quantitative model).

3.1.1. Mischel's social learning paradigm. Over the past 25 years, Mischel and his colleagues have performed many experiments examining the effects of a large number of different variables on self-control in children (see W. Mischel 1966; 1974; 1979; 1981a; 1981b; 1984 for reviews). Prior to 1970, these researchers assessed self-control by simply asking children to express their preference between a larger, more delayed reinforcer and a smaller, less delayed reinforcer. The children indicated their preference by recording their choices in a booklet (see W. Mischel, 1966, for a summary of many of these experiments). In 1970 (Mischel & Ebbesen 1970), because of their increasing interest in the effects of events during the delay intervals and their desire to study situations that were as realistic as possible, Mischel and his colleagues began to study actual choices and actual waiting time for a larger, more delayed reinforcer. In these experiments, an experimenter (E) first determines a child's preference between two snacks (i.e., two values of A_i) and then leaves the room after instructing the child how to signal E to return. The children are also told that if they make the signal (terminating D_i; there is no separate C_i in this procedure), they will receive a less preferred snack. However, if the child waits and does not make the signal, E will eventually return and the child will then receive a more preferred snack. The measure of self-control is how long the child waits. Only one choice opportunity is given, so T_i and F_i are irrelevant.

3.1.2. Herrnstein's matching law. Experiments on the matching law are conducted in an operant conditioning laboratory paradigm and usually use pigeons as subjects. These experiments typically present subjects with two response alternatives for C_i. Choosing either alternative delivers a reinforcer of a particular A_i and/or D_i. Variable-interval (VI) schedules are often used to determine which responses actually result in a reinforcer. Many reinforcers are received in a single session. The subjects are often exposed to a variety of A_is and D_is with many sessions of exposure to each variation. A preprogrammed apparatus that removes the experimenter from direct contact with the subject during a session presents the response alternatives and the reinforcers.

Although the operant laboratory paradigm does not easily lend itself to the investigation of variables such as the influence of the experimenter on the subject, it does avoid any unconscious influence of the experimenter on the subject. In addition, because reinforcer delivery is precisely and automatically controlled, because each subject makes many choices, and because C_i and D_i are not confounded, it is easier to investigate the quantitative relation between responding and reinforcement. This paradigm involves actual choices and actual waiting time, similar to the naturalistic procedure used by Mischel and his colleagues since 1970.

3.2. Molar maximization models

An alternative approach is to consider all of the time periods in Figure 1. Models that do this assume that organisms use this information to choose the alternative that maximizes the total amount of reinforcement received over the entire time period under consideration while at the same time minimizing energy output per unit time spent obtaining reinforcers (see, e.g., Houston & McNamara 1985; Kamil & Sargent 1981; Menzel & Wyers 1981; Pyke et al. 1977). These are therefore referred to as "molar maximization," or simply "maximization" models. Organisms are assumed to maximize because in the past this has been most likely to result in survival, thus wedding molar maximization theories to biology.

When the reinforcers consist of food, molar maximization is usually referred to as optimal foraging theory. Most optimal foraging models use energy as their unit of analysis (for alternative types of optimal foraging models, in which time is minimized rather than energy being maximized, and in which reward variability as well as reward mean are influential, see Caraco & Chasin 1984; Caraco & Lima 1985; Killeen et al. 1981; Maynard Smith 1978; Schoener 1971). These models involve mathematical equations, often extremely complex ones, that include energy obtained by foraging and energy used by locomotion and metabolic functions (see Pyke et al. 1977, for a review). These models are analogous to the earning

and spending of money. Obtained food can be thought of as income (as can A_i), and energy expended in order to obtain that food can be thought of as cost (as can C_i, D_i, and T_i). Many researchers have accordingly examined optimal foraging research in the context of the terminology and the theoretical framework of economics (see, e.g., Allison 1981; Collier 1982; Hursh 1980; Lea 1978). Through integration with the theoretical framework of economics, models developed to describe and predict optimal foraging can be applied to choice situations usually confined to the field of economics – for example, choices between different amounts of money (i.e., different A_is). The integration of optimal foraging theory with economic theory thus makes optimal foraging theory applicable to a wider range of situations, and potentially more useful as a general model for self-control.

Optimal foraging theory is particularly well suited for investigating food choice in naturalistic settings. Because its unit of analysis is energy, it has no difficulty with choices that are to some extent asymmetrical, for example, a choice between chocolate cake at the top of ten flights of stairs and chocolate ice cream on an island in the middle of a lake. As long as the differences between the alternatives can be reduced to a difference in total energy to be gained from either alternative, the choice can be encompassed in optimal foraging theory. Recent molar maximization models have incorporated the economic concepts of substitutability and complementarity in order to better describe and predict choices between qualitatively different foods and drinks (see Hursh 1984; Rachlin et al. 1981).

3.3. Conclusion

The present paper will accordingly focus on the research collected in the context of three models for choice in the self-control paradigm: two local delay models (Mischel's social learning theory and the matching law) and molar maximization models (specifically, a version of optimal foraging theory). Any of the research paradigms used in these three areas of research can be characterized by the time periods in Figure 1. Although other models have sometimes been applied to choices between reinforcers of varying amounts and delays (e.g., Fantino's delay reduction model, 1981; Gibbon's scalar expectancy theory, 1977; Kahneman & Tversky's decision theory, 1984 [see Rachlin et al. 1986, for an application of this theory to self-control]; and Killeen's incentive theory, 1985 [see Snyderman 1983a, for application of this theory to self-control]), the latter models have not been specifically designed for the self-control paradigm and they have been applied to relatively small amounts of data directly concerned with self-control. One of these models may yet turn out to provide a better description of self-control than any of the three to be discussed here; however, the point of the present paper is not to discover the best of these models for specific situations, but to illustrate how research on self-control can be integrated by showing the similarities between three very different research areas. The present discussion will accordingly be limited to Mischel's approach, the matching law, and optimal foraging theory.

4. The causal analysis I: Self-control as a direct function of the current physical values of the reinforcers

The effects on self-control of varying the sizes of D_i and A_i have been investigated from both a local delay perspective and a molar maximization perspective. Many of the results obtained have been similar, although the models constructed from these data have differed.

4.1. Local delay models

4.1.1. Mischel's social learning paradigm. According to research performed using Mischel's procedures, children are more likely to wait when they are waiting for a more preferred rather than a less preferred reinforcer (Crooks 1977; Herzberger & Dweck 1978). They are less likely to wait the longer the time until the experimenter's scheduled return (W. Mischel & Grusec 1967). These findings appear to hold for most children.

4.1.2. Herrnstein's matching law. The first operant conditioning experiments on A_i and D_i found that responses were more frequent as the resulting A_is were increased, and were less frequent as the resulting D_is were increased. Data supporting this conclusion were collected using both nonhuman animals (see, e.g., Ainslie 1975; Chung & Herrnstein 1967; de Villiers 1977; Deluty et al. 1983) and adult humans (Millar & Navarick 1984; Navarick 1982; Solnick et al. 1980). Burns and Powers (1975), working with two children aged 9 and 10, obtained opposite results with D_i. However, Burns and Powers used only two subjects and their results may have been confounded by order effects.

Another basic finding in an operant conditioning self-control paradigm is that of preference reversal: the reversal of a choice of a larger, more delayed reinforcer over a smaller, less delayed reinforcer when the choice is made at a time nearer to receipt of the smaller, less delayed reinforcer (see, e.g., Ainslie & Herrnstein 1981; Green et al. 1981; Kagel & Green 1987). For example, at 11 P.M., many people set an alarm, indicating a choice of getting to work on time instead of sleeping late. However, at 7 A.M., these same people prefer to sleep late.

All of these data can be described using a version of Herrnstein's (1970) quantitative model of choice, the matching law:

$$\frac{B_L}{B_R} = \frac{A_L D_R}{A_R D_L} . \qquad (1)$$

In this equation B_L and B_R represent the number of responses (i.e., behavior, B) on two (left and right) response alternatives, respectively. A_L, A_R, D_L, and D_R represent the amount (magnitude) and prereinforcer delay of a given reinforcer available for responses on those alternatives, respectively (Baum & Rachlin 1969; de Villiers 1977). Equation 1 assumes that relative reinforcer preference, B_L/B_R, is equivalent to relative reinforcer value, with the number of choices for each reinforcer equal to a direct function of the value of that reinforcer. In

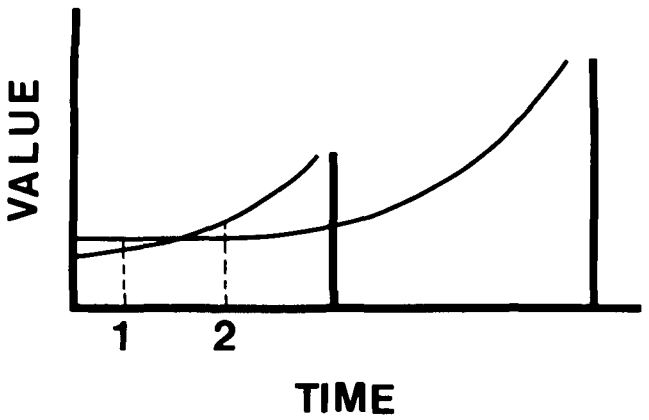

Figure 2. Hypothetical gradients of the value of two reinforcers as a function of time: a larger reinforcer received later in time, and a smaller reinforcer received earlier.

other words, Equation 1 assumes that $B_i = f(V_i)$ and, in this case, that $f(V_i) = A_i/D_i$.

Figure 2 indicates some of the implications of Equation 1. This figure, derived from Equation 1, is a hypothetical diagram of the value of two separate reinforcers as a function of time (see Ainslie 1975). The two vertical solid lines represent the times at which a smaller, less delayed reinforcer (the left vertical line) and a larger, more delayed reinforcer (the right vertical line) are received. The height of each vertical line represents A_i. The curves indicate how the values of these reinforcers decrease as one moves backward in time, to the left, increasing the D_is. The sizes and shapes of these functions are such that they cross. Earlier in time, prior to this crossover point (e.g., at point 1), the larger, more delayed reinforcer has greater value. Later in time, after the crossover point but before receipt of the smaller, less delayed reinforcer (e.g. at point 2), the smaller, less delayed reinforcer has greater value. These characteristics of the functions account for the preference reversals described above.

There is one set of findings that is in contrast with Equation 1 and Figure 2. The matching law states that behavior varies as a function of the relative, not the absolute, value of reinforcement. In other words, the preference between reinforcers that are delayed 4 s versus 2 s should be the same as the preference between reinforcers that are delayed 8 s versus 4 s, because in each case reinforcer delays are in the ratio 2/1. Yet research has shown that preference does change when the absolute but not the relative values of D_i, A_i, or F_i are increased (Logue & Chavarro 1987; Williams & Fantino 1978). Such effects can be minimized, however, by limiting the range over which the absolute values of the reinforcer parameters are varied. Unfortunately, there is as yet no model better than Equation 1 for describing these data (Logue & Chavarro 1987).

4.2. Molar maximization

Many researchers have described what has been called the classical optimal foraging model for situations involving a choice between two types of prey (see, e.g., Charnov 1976; Houston & McNamara 1985; Krebs et al. 1983; Pulliam 1974). According to this model, each of the two prey types can be described using three parameters: for a particular prey type i, λ_i (the rate at which the prey is encountered in the environment, here F_i), h_i (the time taken to prepare the prey for consumption, i.e., handling time, here C_i and D_i), and e_i (the gross energy gained by consuming the prey minus the energetic costs of obtaining the prey, here A_i). The profitability of a particular prey type is then defined as e_i/h_i (remarkably similar to A_i/D_i in the matching law, Equation 1). If prey type 1 is more profitable than prey type 2, this model predicts that type 1 will always be chosen over type 2 unless

$$\frac{1}{\lambda_1} > \frac{e_1}{e_2} h_2 - h_1.$$

In other words, prey type 1 will always be chosen over prey type 2 unless the time between encounters of type 1 prey is large with respect to the differences in gross energy gained and handling time required for type 1 as compared to type 2 prey. Houston and McNamara (1985) also developed their own version of optimal foraging theory which, instead of energy gain, emphasizes minimizing the probability of starvation.

Optimal foraging theory has been successfully applied to choices between a larger, more delayed and a smaller, less delayed reinforcer. For example, Collier (1982) has described experiments in which, when many responses were required to obtain any meal, chickens or cats chose to wait several days and eat a large meal rather than eat several smaller, less delayed meals. In another experiment, rats chose a long D_i when that alternative required fewer responses. Together, these experiments show that nonhuman subjects will choose to wait for reinforcers under some conditions. In particular, in both experiments, choosing to wait involved less total energy expenditure and resulted in molar maximization. As another example, Schoener (1979) has summarized optimal foraging theory and research on the effect of distance to prey (treated here as D_i) on size of prey taken (A_i). The specific predictions differ depending on whether or not the predator must (and can) transport the captured prey, but all of the results conform to a model in which the prey chosen results in maximum energy intake with minimum energy expenditure. Specifically, Schoener states that in the case of birds bringing insects (all easily transported) to the birds' young in their nest, molar maximization predicts that at greater distances larger insects should be chosen, and that this prediction has been confirmed.

In general, in a self-control paradigm, maximization predicts that a larger, more delayed reinforcer will always be chosen over a smaller, less delayed reinforcer (i.e., self-control will be shown). But, depending on the particular version of optimal foraging theory used, such a prediction can be contingent on the frequency of the reinforcers, the energy involved in making each choice, the energy state of the organism doing the choosing, and whether the subject can detect both reinforcers at the same time (see Houston & McNamara 1985; Krebs & McCleery 1984). For example, Killeen et al. (1981) have summarized findings suggesting that organisms will (at least under some conditions) choose a smaller food source over a larger one if the expected time until food consumption is thereby decreased so that, in the long run, total food intake is maximized.

5. The causal analysis II: Self-control not a direct function of the current physical values of the reinforcers

The findings described so far have been those that were fairly constant across individuals. In those experiments, behavior was a direct function of the physical characteristics of the reinforcers. However, there have been many other experiments on self-control in which behavior has varied both within and between individuals. In these experiments behavior was not a direct function of the physical characteristics of the reinforcers, but was a function of other aspects of the environment or the particular subject being tested. In other words, in these experiments there was regularity in the data, but that regularity involved variables other than the physical characteristics of the reinforcers. Such findings have challenged models of self-control, necessitating similar changes in those models, and thus lessening their differences.

5.1. Local delay model I: Mischel's social learning paradigm

5.1.1. Variation in self-control independent of the present situation. Some subjects in the Mischel social learning paradigm show more self-control than others, even though all are exposed to the same current situation. For example, experiments have found that, in general, older children are more likely to wait than are younger ones. Miller et al. (1978) obtained more self-control in third-grade children than in kindergartners. Sarafino et al. (1982) likewise found more self-control in fourth-graders than in kindergartners. On the other hand, Crooks (1977) and Schwarz et al. (1983) found no differences between 10 to 12- as compared with 6 to 7-year-old children, and 5- compared with 3-year-old children, respectively. H. N. Mischel and W. Mischel (1983) found that children began to express knowledge of behaviors associated with delaying, such as engaging in distracting activities, at about age 5 (metacognition). Taken together, these studies indicate a transition to greater delaying behavior (in the Mischel paradigm) that usually occurs around the age of 5 years.

Even within a given age group, there are some children who show more self-control than others. Mischel has found that these differences in self-control may be predictive of other, later, individual characteristics. Preschoolers who were better able to wait for the larger reinforcer were also reported by their parents as being more socially competent when the children became juniors and seniors in high school (W. Mischel 1983).

5.1.2. Variation in self-control as a function of present factors other than the physical values of the reinforcers. Various types of events and activities during the D_is also affect self-control. For example, both of the findings described above, the relationship between age and self-control, and consistent individual differences in self-control, may be related to self-verbalization (talking to oneself). Many studies have found that the type of self-verbalization in which a child engages during the D_is is associated with how long the child delays (see, e.g., Anderson & Moreland 1982; Kanfer & Zich 1974; Kendall 1977; Kendall & Finch 1976; 1978; O'Leary 1968; Toner et al. 1979; Toner & Smith 1977). In general, these studies find that if children make statements during the D_i that repeat the long-D_i reinforcer contingency, they are more likely to wait for that reinforcer. In addition, children will wait longer for a food reward if they are told either to think about something other than food during the delay or to think about a food other than the one for which they are waiting (W. Mischel & Baker 1975). On the other hand, instructions to think about the consummatory properties of the reinforcer, such as the soft sweet taste of a marshmallow, decrease waiting (Moore et al. 1976; Yates & W. Mischel 1979). Consistent with this research on self-verbalization, W. Mischel and Moore (1980) have found that viewing slides of a larger, more delayed reinforcer increases waiting, whereas actually seeing either the larger, more delayed reinforcer or the smaller, less delayed reinforcer decreases waiting (W. Mischel & Ebbesen 1970). As children age, they may get better at performing the types of behaviors that increase self-control. In addition, some children may be better at self-verbalization than others.

5.1.3. The model. Mischel and his colleagues have developed a model that describes all these data. According to this model, any behavior that focuses on the motivational, consummatory qualities of the reinforcers ("hot thoughts") increases the frustration of delay of reward and the aversiveness of the situation and decreases waiting time, whereas behavior that focuses on other types of information about the choices ("cool thoughts") has the opposite effect (see W. Mischel, 1981b, for a discussion and review of the data supporting this model). According to Mischel, as children grow older, they acquire verbal strategies and other behaviors that prevent a focus on the consummatory aspects of reinforcers during the delays to those reinforcers. Consequently, older children are more likely to wait for a larger but more delayed reinforcer. Differences in self-verbalization and metacognition may be responsible for many of the individual differences in self-control described above for the Mischel paradigm. Mischel has dealt with the problem of differential response to non-differential reinforcers by postulating changes in children's mental representations of events (i.e., thoughts), changes that are influenced by changes in cognitive capacities (W. Mischel 1981a; see also Copeland 1983; Pressley 1979).

5.2. Local delay model II: Herrnstein's matching law

5.2.1. Variation in self-control independent of the present situation. First, orderly differences in self-control between subjects tested in an operant conditioning paradigm have been observed as a result of previous experimental history. The initial experiment of this type was conducted by Mazur and Logue (1978; see Figure 3 for a diagram of the procedure). Mazur and Logue first presented pigeons with a choice between 6 s of food delayed 6 s, and 2 s of food delayed 6 s. Under these conditions, the pigeons always chose the larger (6 s) reinforcer. Then that choice was gradually "faded" (see Ferster 1953; Holland 1960; Terrace 1966), over 11,000 trials, to a choice between 6 s of food delayed 6 s and 2 s of food

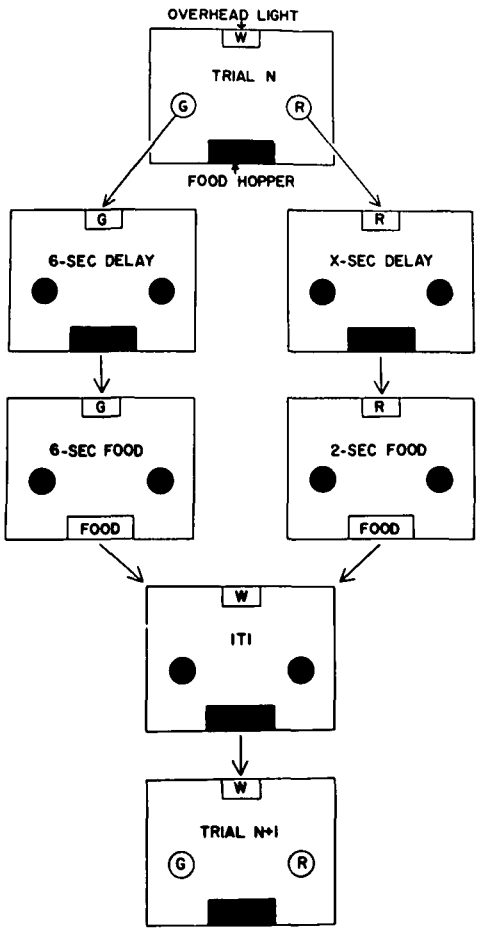

Figure 3. Diagram of a typical trial of the fading procedure used to increase self-control in pigeons. Each box represents one stage within a trial. The small square at the top of each box indicates the color of the overhead illumination: white (W), green (G), or red (R). The circles represent the response keys, and the letters in the circles indicate the colors of the keys. The rectangle in the bottom part of each box represents the food hopper. The arrows show the effect of a peck on one of the keys. The x-sec delay was initially 6 s, and was gradually faded to .11 s.

delayed 0.1 s. The pigeons that had been exposed to this fading procedure continued to choose the larger, more delayed reinforcer in most instances. However, pigeons that had been exposed only to the initial and final choices without the intervening fading experiences were virtually always impulsive, choosing the smaller, less delayed reinforcer in most instances. The fading must be gradual in order to increase self-control (Logue et al. 1984), but its effects can last for at least one year (Logue & Mazur 1981). Perhaps past experience is responsible for some of the variability seen in both self-control experiments with human subjects and those with nonhuman subjects. Consistent with this view, Eisenberger and his colleagues (Eisenberger & Adornetto 1986; Eisenberger & Masterson 1986; Eisenberger et al. 1982) have found that previous exposure to D_i or effort required to obtain reinforcement increases both rats' and children's tendency to choose a reinforcer that is larger but more delayed or a reinforcer that is larger but requires more effort, respectively.

A second finding is that, at least in pigeons, level of food deprivation does not appear to affect impulsiveness. As food deprivation is increased, pigeons will approach the food hopper more quickly and increase their nocturnal responding to obtain more food, but they will not decrease their impulsiveness (Logue et al. 1988; Logue & Pena-Correal 1985; these results might be different with other species and in other situations, see Christensen-Szalanski et al. 1980; Collier 1982; Eisenberger et al. 1982; McSweeney 1974; 1975; Snyderman 1983b; Wong 1984). Equation 1 and Figure 2 are consistent with Logue and Pena-Correal's (1985) findings. If it is assumed that deprivation level increases or decreases all reinforcer values by the same percentage, the relative heights of the curves in Figure 2 would remain constant and relative preference, as represented by B_L/B_R, would likewise remain constant.

5.2.2. Variation in self-control as a function of present factors other than the physical values of the reinforcers. Aspects of the current experimental procedure other than the physical characteristics of the reinforcers can also affect self-control. First, as in Mischel's experiments, presenting some sort of stimulus during the D_is seems to help maintain responding (Lattal 1984). This was shown specifically in the self-control paradigm by Grosch and Neuringer (1981) and Logue and Mazur (1981). However, if the stimulus is the reinforcer itself, again similar to Mischel's work, self-control decreases (Grosch & Neuringer 1981).

Still another similarity to Mischel's results is that the opportunity to make a response during the long delay increases self-control (Grosch & Neuringer 1981; Logue & Pena-Correal 1984). A special case of this finding is a procedure in which the subject can change its choice while waiting for the reinforcers. Ainslie (1974) and Rachlin and Green (1972) originally studied this type of procedure as part of their investigations of precommitment (see Figure 4 for their procedure). Pigeons are first given a choice between pecking two response keys. Pecking one key leads, after a delay, to the usual self-control choice. Pecking the other key leads, after a delay, to the opportunity to peck only the key associated with the larger, more delayed reinforcer. In essence, then, this latter path involves a precommitment to choosing the larger, more delayed reinforcer. In both Ainslie's and Rachlin and Green's studies, the pigeons showed self-control more frequently when they could commit themselves in advance to a later choice of the larger reinforcer, substantially before either reinforcer was to be received (i.e., when they could commit themselves to the larger reinforcer at point 1 on Figure 2).

Logue and Pena-Correal (1984) examined precommitment by giving their pigeons the opportunity during the delay to the larger reinforcer to change their choice to the smaller reinforcer (Figure 5 diagrams this procedure). In addition, Logue and Pena-Correal exposed their pigeons to a fading procedure in which a choice between an immediate larger reinforcer and an immediate smaller reinforcer was gradually faded to a choice between a delayed larger reinforcer and an immediate smaller reinforcer. The results showed that at the end of the fading procedure the pigeons made as many initial larger rein-

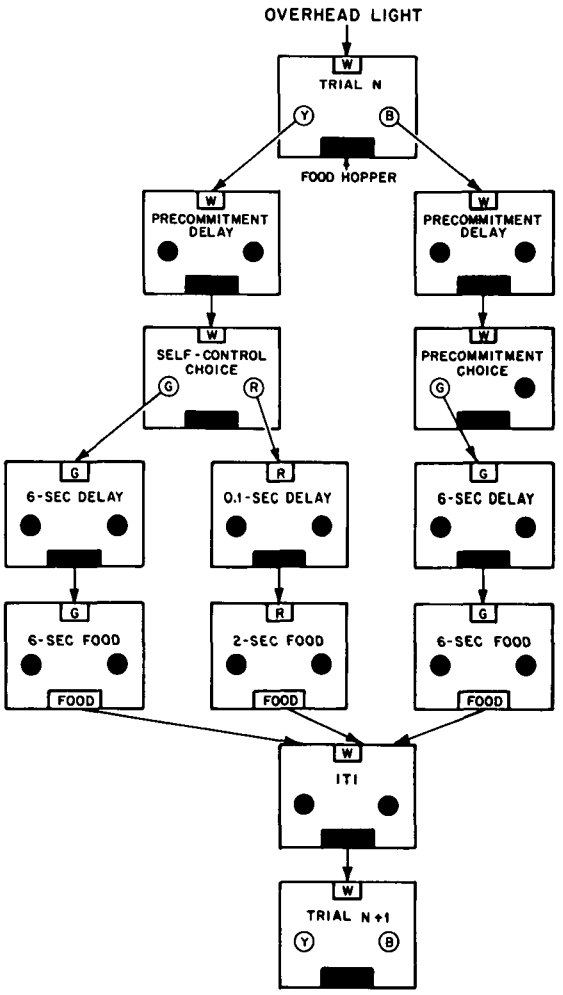

Figure 4. Diagram of a typical trial of a procedure used to study precommitment in pigeons. The overhead light and key lights are illuminated white (W), yellow (Y), blue (B), green (G), or red (R). The procedure is similar to that depicted in Figure 3, except that prior to the self-control choice the pigeons have the opportunity to precommit themselves to the larger, more delayed reinforcer.

forcer choices as did the fading-exposed pigeons of Logue et al. (1984) and Mazur and Logue (1978). However, during the D_is to the larger reinforcer, many of Logue and Pena-Correal's pigeons changed their choices, ultimately receiving the smaller reinforcer. It therefore appears that the lack of an opportunity for the previously fading-exposed pigeons to change their choices (i.e., precommitment) was responsible for their showing self-control.

Finally, the distribution of pigeons' as well as humans' choices in the self-control paradigm tends to vary according to the particular schedules that deliver the reinforcers for responses on the two response alternatives. When the reinforcers are delivered according to continuous reinforcement schedules (e.g., Logue & Pena-Correal 1984; Logue et al. 1986, Experiment 1), the subjects tend to pick their most preferred alternative each time. When the reinforcers are programmed according to two independent variable-interval schedules (e.g., Logue et al. 1984, Experiment 2; Logue et al. 1986, Experiments 2–5), responses tend to be distributed over the two alternatives in proportion to the value of the reinforcers. The schedule that results in the most equal responding between the two alternatives is a nonindependent concurrent VI VI schedule (Stubbs & Pliskoff 1969). In this schedule, each time an interval times out in a single VI schedule, the resulting available reinforcer is randomly assigned half the time to the left alternative and half the time to the right. Thus, the subject must repeatedly switch between responding on the two alternatives in order to receive reinforcement. It is not surprising therefore that the least differential responding is obtained with this schedule (Chavarro & Logue 1988; Logue & Chavarro 1987; Logue et al., submitted; Rodriguez & Logue 1986).

5.2.3. Model modifications. None of the between- or within-subject variability outlined above can be described by the original matching law (Equation 1). Logue et al. (1984) proposed a modification of the matching law that could describe these findings:

$$\frac{B_L}{B_R} = k\left(\frac{A_L}{A_R}\right)^{s_A}\left(\frac{D_R}{D_L}\right)^{s_D}, \qquad (2)$$

where k is a free parameter that represents response bias to choose the left alternative when k is greater than 1.0, or the right alternative when k is less than 1.0, and the exponents s_A and s_D are two other free parameters that

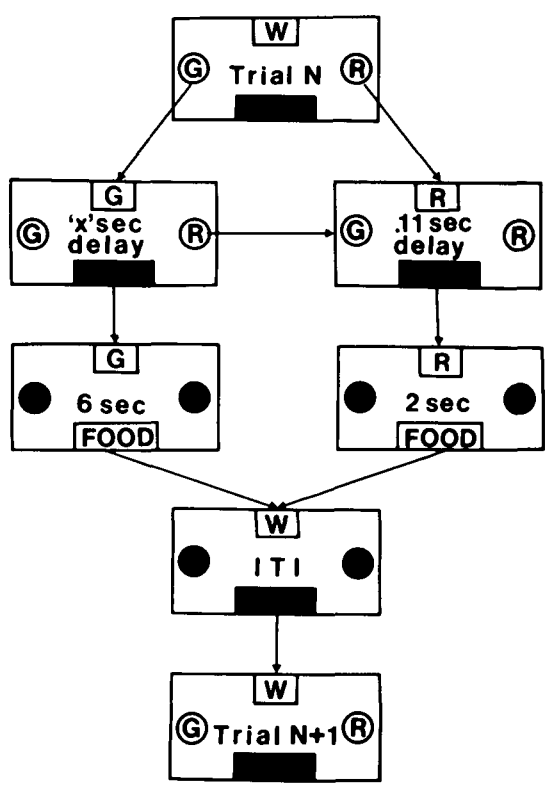

Figure 5. Diagram of a typical trial used to study the effect on self-control of responding during reinforcer delays. Each box represents one stage within a trial. The small square at the top of each box indicates the color of the overhead illumination: white (W), green (G), or red (R). The circles represent the response keys, and the letters in the circles indicate the colors of the keys. The rectangle in the bottom part of each box represents the food hopper. The arrows show the effect of a peck on one of the keys. The x-s delay was initially .11 s, and was gradually faded to 6 s.

represent the subject's sensitivity to relative variation in A_i and D_i, respectively (see Davison 1982; for an alternative, although largely untested, model for describing variation in self-control see Herrnstein 1981). An exponent greater than 1.0 indicates that any change in the corresponding reinforcer ratio is reflected in an even larger change in the response ratio. The opposite is true if the exponent is less than 1.0; in the most extreme case, if the exponent is equal to 0.0, changes in the corresponding reinforcer ratio have no effect on response preference. The ratio s_A/s_D measures sensitivity to A_i relative to sensitivity to D_i. A subject whose behavior is controlled more by A_is than by D_is, that is, whose exponent ratio is greater than 1.0, would be more likely to wait for the larger reinforcer than a subject whose exponent ratio is less than 1.0. Equation 2 is a version of Baum's (1974b) generalized matching law (see Green & Snyderman 1980; Hamblin & Miller 1977; Hunter & Davison 1982; Schneider 1973; Todorov 1973, for other similar equations). It expresses choice as power functions of the actual A_is and D_is of the reinforcers.

Figure 6 can help to illustrate the effects of the exponents in Equation 2. In the top panel, $s_A = s_D = 1.0$ (equivalent to Equation 1; see Figure 2). In the middle panel, $s_A < s_D$. Now the curves decrease more quickly, and the crossover point shifts to the left. The time period over which the curve for the smaller reinforcer is higher than that for the larger reinforcer is now longer; there is a longer time period over which impulsiveness will be shown; impulsiveness is now shown at both times 1 and 2. In the bottom panel, the opposite is true: $s_A > s_D$. Now the curves decrease less quickly, and the crossover point shifts to the right. Self-control is now shown at both points 1 and 2.

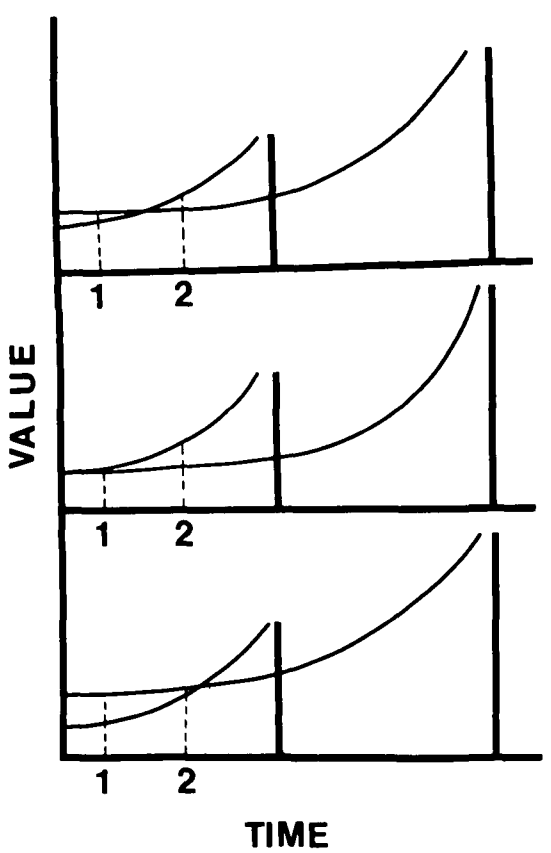

Figure 6. Hypothetical gradients of the value of two reinforcers as a function of time. The top panel is identical to Figure 2. The middle panel shows the same situation when reinforcer value declines more quickly as a function of delay. The bottom panel shows the same situation when reinforcer value declines more slowly as a function of delay.

Logue et al. (1984) found that Equation 2 provided an accurate, consistent description of the self-control behavior of pigeons trained using the fading procedure and of pigeons which did not receive this training (see Table 1). With two different methods of obtaining the exponents, pigeons with fading-procedure exposure tended to have ratios of s_A/s_D that were greater than 1.0, other pigeons tended to have ratios that were less than 1.0, and individual fading-exposed pigeons showed similar ratios. Thus Equation 2 operates similarly to the power functions used in psychophysics (Stevens 1975). In that field too, stable individual differences have been shown in the exponents of the power functions relating judgments of magnitude to actual physical magnitude (see, e.g., Gray 1985; Hellman 1981; Logue 1976).

All the data described above in which self-control in pigeons and humans was not a direct function of the physical characteristics of the reinforcers can be described using Equation 2. Manipulations that increase self-control are expressed as higher values of s_A/s_D and vice versa. In addition, manipulations that result in greater or less differential responding between the two alternatives can be expressed by changes in the absolute values of s_A and s_D. For example, schedules that result in fairly equal responding between the two alternatives tend to produce relatively low values for both exponents (Chavarro & Logue 1988; Logue & Chavarro 1987; Logue et al., submitted; Rodriguez & Logue 1986; see Wiest & Bell 1985, for a summary of how experimental procedures can affect the exponents of Stevens' power functions).

Equation 2 makes an assumption that has been successfully investigated and confirmed: that amount and delay of reinforcement are independent in the sense that changes in the ratio of one should not affect the exponent of the other. Rodriguez and Logue (1986) exposed pigeons to all possible combinations of four A_i ratios and four D_i ratios. They found that A_i and D_i do indeed exert independent effects on behavior.

The generalized matching law appears to provide a good description of a variety of data from experiments in which the subjects choose between reinforcers of varying A_is and D_is. It is particularly well suited for situations in which behavior is not a direct function of the actual physical characteristics of the reinforcers, that is, differences in choice between reinforcers of varying A_is and D_is that arise between subjects or for the same subject in different situations. The exponents modify a basic model such that, with these modifications, behavior may at times be more or less sensitive to the environment. The generalized matching law fits choice data collected with many different types of species and in many different types of situations, including naturalistic situations involving groups of subjects and/or 24-hour sessions, and situations in which reinforcer frequency is varied and/or negative reinforcement is used (see, e.g., Baum 1972;

Table 1. *Values of s_A/s_D for pigeons with and without self-control training (fading procedure exposure)*

Experiment (and method[a])	Subject[b]	s_A/s_D
Fading-exposed subjects		
Logue et al. (1984, 1A) (C)	100	2.7
	101	1.8
	102	1.5
	median	1.8
Logue et al. (1984, 2) (S)	100	3.4
	101	1.7
	102	1.5
	median	1.7
Logue et al. (1984, 1B) (C)	104	0.7
	105	1.5
	106	3.1
	107	1.4
	median	1.4
Mazur & Logue (1978) (C)	46	1.3
	291	1.1
	492	1.3
	127	1.5
	median	1.3
Nonfading-exposed subjects		
Ainslie & Herrnstein (1981) (C)	1	0.8
	2	1.2
	3	0.6
	4	1.2
	5	0.7
	6	0.7
	median	0.8
Green et al. (1981) (C)	11	0.4
	12	0.3
	13	0.3
	14	0.3
	median	0.3
Logue et al. (1984, 2) (S)	67	0.6
	56	0.9
	61	0.8
	62	1.4
	median	0.9

[a]*The values of s_A/s_D were calculated either by the crossover point method (C), or by the slopes method (S) (see Logue et al. 1984).*

[b]*The following subjects never chose more small than large reinforcers in discrete-trial procedures, and so their values of s_A/s_D calculated using the crossover point method are underestimates: 46, 291, and 5.*

1974a; 1979; Conger & Killeen 1974; de Villiers 1977; Logue 1983; Logue et al. 1988; Logue & de Villiers 1978). For example, Houston (1986) found that the generalized matching law provided a good description of the behavior of pied wagtails foraging in the wild.

5.3. Molar maximization

5.3.1. Species differences. Although the generalized matching law has had many successes, there are some situations of relevance to the self-control paradigm for which molar maximization appears to provide a better quantitative description. For example, the generalized matching law has had some difficulty in describing variation in self-control and variation in sensitivity to A_i and D_i as a function of the species being tested. More specifically, in contrast to experiments with nonhumans, the only laboratory experiments that have consistently reported impulsiveness in humans have used either children (Burns & Powers 1975) or negative reinforcement with adults (Navarick 1982; Solnick et al. 1980). Both of the studies with adults used escape from loud noise as the

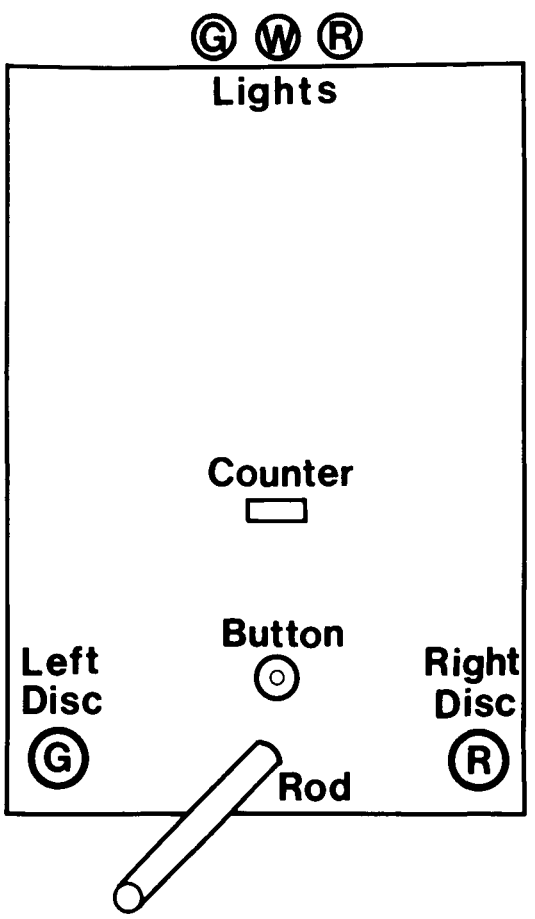

Figure 7. Diagram of the aluminum panel used in Logue et al.'s (1986) experiments. G, W, and R indicate the colors green, white, and red, respectively. Rod pushes toward a lit disc occasionally result in the illumination of the hole in which the button is located (reinforcement access). Each press of the button when the hole is illuminated increments the counter by one point. The lights above the panel illuminate the chamber. The green light is illuminated during left-reinforcer delays and access times, the red light during right-reinforcer delays and access times, and the white light at all other times.

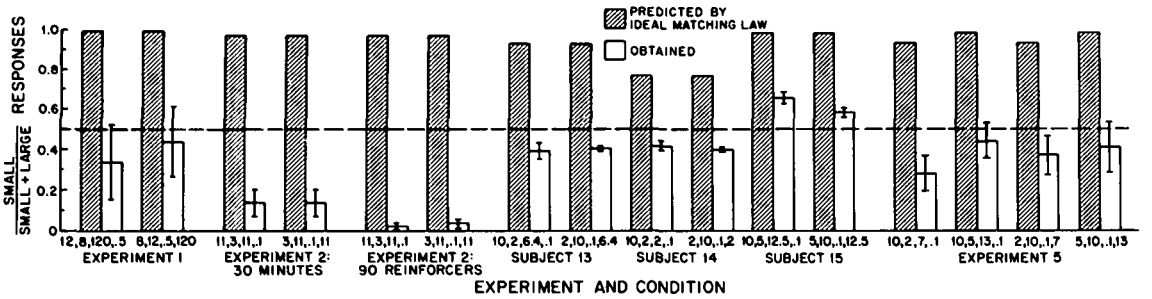

Figure 8. The proportion of responses made to the side that received the small reinforcer for each of the conditions (A_L, A_R, D_L, D_R) in Logue et al. (1986) in which the choice was between a larger, more delayed reinforcer and a smaller, less delayed reinforcer. The shaded bars show the predictions of the original version of the matching law, Equation 1, which provides a good description of the behavior of pigeons. The open bars represent the obtained mean proportions. The vertical lines depict one standard error on each side of the mean. The dashed line represents equal preference for rod pushes to either side, a proportion of .50. Results are shown for the groups of subjects in Experiments 1, 2, and 5 ($N = 4$ in each case), but individually for the subjects in Experiment 4 (Subjects 13, 14, and 15), because each subject was exposed to different conditions.

reinforcer, and both obtained basic confirmation of the matching law only when data were averaged over large groups of subjects. Millar and Navarick (1984) were able to obtain impulsiveness in only 40% of their subjects when a positive reinforcer (access to a video game) was used.

Logue et al. (1986) reported the results from five experiments in which female humans were given the same choices between reinforcers of varying amounts and delays as were given by Logue et al. (1984) to pigeons. The human subjects pushed a rod to gain access to a button that delivered points exchangeable for money following the session (see Figure 7 for a diagram of the apparatus). In contrast to results with pigeons and the original matching law (Equation 1), subjects exposed to conditions in which the choice was between a larger, more delayed and a smaller, less delayed reinforcer tended to show self-control (see Figure 8). In addition, the subjects chose a greater proportion of the larger, more delayed reinforcers than was predicted by either the original matching law or the generalized matching law with its three free parameters estimated from each individual subject's own previous data (see Table 2). Apparently, under at least some conditions in a self-control paradigm, the generalized matching law fits well when three free parameters can be fitted to a subject's data, but it does not fit well when predictions are made using free parameters based on previous data from the same subject.

In postsession questionnaires all of Logue et al.'s (1986) human subjects reported following maximization strategies. The subjects stated that they attempted to estimate the durations of the events occurring during the experiments through various counting techniques, and then, based on that information, to follow the strategy that would obtain the most total points during a session (similar to Levine's, [1975] hypothesis testing and perhaps H. N. Mischel & W. Mischel's [1983] description of metacognition). In general, the subjects' behavior in Logue et al.'s (1986) experiments did tend to result in their receiving more total reinforcement than they would have received had they followed the matching law. Therefore the data, as well as the subjects' own reports, suggested that the subjects were following a maximization strategy during the experiments and that this behavior was based on their verbal abilities and histories. This conclusion is consistent with the results from several other operant conditioning experiments with adult humans and children suggesting that human subjects frequently maximize when choosing between reinforcers of varying sizes and delays (King & Logue 1987; Mawhinney 1982; Miller et al., in press; Navarick 1986; Rodriguez & Logue 1988); and that the presence or absence of covert or overt verbal behavior can have an effect on performance in laboratory operant conditioning experiments (Baron & Galizio 1983; Lippman & Meyer 1967; Lowe, Harzem & Bagshaw 1978; Lowe, Harzem & Hughes 1978; Matthews et al. 1985; Matthews et al. 1977; Mawhinney 1982; Shimoff et al. 1981).

5.3.2. Perceptual and response constraints. Lowe (1979; 1983) has suggested that what human subjects say to themselves is critical to how they behave on schedules of reinforcement. This verbal behavior affects the perceived contingencies of reinforcement. According to Lowe, it is

Table 2. *Predicted and obtained proportions of responses for small reinforcers for the last two conditions of Logue et al. (1986, Experiment 4)*

	$\frac{\text{Small}}{\text{Small + Large}}$ Rod pushes		
	Predictions		
Subject and condition (A_L,A_R,D_L,D_R)	Original matching law	Generalized matching law	Actual obtained data
Subject 13			
10,2,6.4,.1	.92	.82	.38
2,10,.1,6.4	.92	.82	.40
Subject 14			
10,2,2,.1	.78	.96	.41
2,10,.1,2	.78	.96	.40
Subject 15			
10,5,12.5,.1	.98	.81	.66
5,10,.1,12.5	.98	.81	.58

these perceived contingencies that control behavior rather than the actual contingencies.

This analysis implies that the behavior of nonverbal children and nonverbal adults will be more similar to the behavior of nonhumans than will the behavior of verbal children and verbal adults. These implications appear to be supported by the available data. With fixed-interval schedules only, the responding of young, preverbal children, as compared with older children and adults, is similar to the responding of pigeons (Bentall et al. 1985; Lowe et al. 1983), and instructions can increase the similarity of the responding of verbal children to that of adults (Bentall & Lowe 1987). In addition, among preschool children, boys show significantly less self-control than do girls (Chavarro & Logue 1987; Metzner & Mischel 1962, cited in Maccoby & Jacklin 1974; Walsh 1967), consistent with girls' more rapid acquisition of some types of verbal skills (Maccoby & Jacklin 1974). Perhaps the colored overhead delay lights necessary to the self-control shown by Logue et al.'s fading-exposed pigeons (Logue & Mazur 1981) serve a function similar to adult humans' verbal behavior. In both cases the subjects may be receiving "reminders" (or conditioned reinforcers, see Cronin 1980) of the reinforcer to come. Hence the fading-exposed pigeons behave more similarly to humans than do the pigeons not exposed to the fading procedure.

Just as the generalized matching law can describe some cases of increased self-control, maximization theory does have a way to accommodate cases in which subjects, such as pigeons and young children, consistently do not maximize. For example, it can describe the finding that pigeons not exposed to the fading procedure will repeatedly pick the smaller, less delayed reinforcer even though these choices result in less total received reinforcement. Maximization theory does this by postulating that the time over which an organism can integrate a series of events (the organism's "memory window," "time window," or "time horizon," Cowie 1977; Killeen 1982; Krebs & Kacelnik 1984; Lea 1981; Rachlin 1982; Staddon 1983, chap. 6) is less than the D_i to the larger reinforcer. In most experiments on self-control with nonhuman subjects it appears very difficult to obtain integration of events over more than a few seconds. There are many examples of pigeons and rats being very sensitive to D_i as compared with more molar variables such as F_i (see Dunn & Fantino 1982; Hall-Johnson & Poling 1984; Hineline 1970; Lea 1979; Logue et al., in press; Logue & Pena-Correal 1985; Logue et al. 1985; Mazur 1981; 1986; McDiarmid & Rilling 1965; Moore 1979; 1982; Morris 1986; Poling et al. 1987; Shull et al. 1981; Thomas 1981; 1983; Timberlake 1984). If the time window is indeed very short in nonhuman subjects then, functionally, such a subject's choice in a self-control paradigm is between a smaller reinforcer now or no reinforcer at all. Timberlake et al. (1987) have recently argued that there may be no single time horizon – that the time horizon differs depending on the situation in which the organism is placed. More specifically, Timberlake et al. found that rats were able to anticipate food that was delayed 64 min, but their current responding was suppressed only when food was delayed by no more than 16 min.

These examples illustrate that maximization can describe much nonoptimal behavior by assuming that organisms make choices maximizing reinforcement within their perceptual and response constraints. There has been some quantitative modeling of the effects of such constraints on optimal behavior (see e.g., Houston & McNamara 1984; Kacelnik & Houston 1984; Staddon 1980), thus modifying the direct function relating behavior with the physical characteristics of the reinforcers.

5.3.3. Effects of experience. Many of the original molar maximization models assumed that subjects have perfect knowledge of their environment – a simplifying, although clearly incorrect, assumption. Recently, similar to Mischel's social learning theory and the generalized matching law, these models have had to include the effects of experience on subjects' behavior by showing how the models change as the subjects gain information about their environments. For example, Houston and McNamara's (1988) model uses Bayes' theorem and posterior probabilities of reward to express these changes in knowledge. (For other examples of how the effects of learning are incorporated in molar maximization models see Cornell 1976; Dow & Lea 1987; Green 1980; Hughes 1979; Krebs et al. 1983; Oaten 1977; Pietrewicz & Richards 1985.) Current molar maximization models do attempt to incorporate the constraints resulting from subjects lacking perfect knowledge.

6. The causal analysis: Summary of effects

Figure 9 summarizes the effects on self-control that have been discussed here. The choice between reinforcers of varying A_is and D_is is a function of all of these different factors. Many of the effects in Figure 9 concern behavior that is not a direct function of the current physical values of reinforcers: changes in self-control as a result of past experience, changes in self-control as a result of present aspects of the environment, and changes in self-control as a result of various physiological constraints.

Investigations of all three of these models have identified similar effects on self-control. Hence the models

- Current Actual Physical Values of the Reinforcers
  - Amount
  - Delay
    - Prereinforcer
    - Postreinforcer
  - Probability
  - Rate
- Other Aspects of the Current Situation
  - Delay Activities
    - Distracting Responses
    - Hot vs. Cool Thoughts
    - Precommitment
  - Delay Stimuli
  - Deprivation
  - Type of Reinforcer Schedule
- Factors Independent of the Current Situation
  - Species
  - Individual Differences Within a Species
    - Age
    - Experience
    - Self-Verbalization
    - Other Perceptual and Response Constraints

Figure 9. Summary of the factors affecting self-control that have been described in this target article.

themselves also have similarities, and these similarities have been increasing. From the beginning, all three models have agreed that, all else being equal, larger, less-delayed reinforcers should be chosen. More specifically, the two quantitative models – the matching law and molar maximization – are both based on the assumption that behavior is a function of A_i/D_i. Subsequently, the three models have also had similar ways of dealing with behavior that is not a direct function of the physical characteristics of the reinforcers. Mischel's social learning theory, as well as much of the rest of cognitive theory (see, e.g., Roitblat 1982), has dealt with such variation in self-control by postulating changes in cognitive "representations" (W. Mischel 1981a; 1981b). The generalized matching law, on the other hand, has described such data with changes in the values of the exponents in Equation 2. Molar maximization has also been able to describe some of these types of effects by postulating changes in subjects' perceptual and response constraints, as exemplified by postulating differences in subjects' time horizons.

All these modifications serve to describe changes in sensitivity to reinforcement as a result of factors other than the current physical values of the reinforcers. In effect, all three models have postulated an unobserved translation of actual into "perceived" reinforcement, as well as postulating various constraints that may be present affecting the organisms' perception of reinforcement (Gray 1985). All the models are thus ways of expressing perception. The exponents in the generalized matching law and the time window concept in molar maximization are attempts to express quantitatively this lack of one-to-one relationship – essentially, they are quantitative expressions of the cognitive concept, perceived reinforcement. Perception is used here as a hypothetical, unobservable construct that simply represents the observable influence of various factors on the relationship between behavior and reinforcers. The concept of perceived reinforcement has resulted from the lack of an isomorphism between reinforcement and behavior.

The use of the concept of perception as an expression of constraints on subjects' sensitivity to the environment is not new. For example, as described above, researchers studying human operant conditioning have been using this concept to help describe some of the lack of correspondence between behavior and the current environment that seems to be so prevalent with human subjects. It may be a general characteristic of the development of behavioral scientific models that they must eventually address effects that are not a direct function of the current physical characteristics of the environment, in a way analogous to chemists' explaining "molar physical properties of substances in terms of internal states, such as the valence of atoms; polarization of molecules, and so on" (Killeen 1984, p. 28).

In all three cases, as the models moved away from simply stating behavior as a function of current measured reinforcer characteristics, they became able to describe more data, but perhaps they also became harder to disprove. For example, maximization's time windows can be expanded and contracted to fit a variety of experimental results, and Mischel's mental representations can likewise vary according to whatever data are obtained. As was shown by Logue et al.'s (1986) data (see Table 2), when the generalized matching law is simply fitted to a current set of data with its three free parameters, it is able to fit the data well. It was not until these free parameters were used to predict a new set of data that the generalized matching law did poorly. In these models, then, the improvement in descriptiveness has not necessarily been accompanied by an improvement in their predictiveness.

The three models frequently make similar predictions. For example, all three would predict that any manipulation that would make time to reinforcement seem to go faster (represented as a focus on nonconsummatory mental representations in Mischel's model, as relatively lower values of s_D in the generalized matching law, and as a larger time-window in maximization) should increase self-control. This is not surprising, because in many respects the generalized matching law is a quantitative version of Mischel's model; the generalized matching law describes a continuous quantitative function between behavior and local parameters of reinforcement, and Mischel's model simply describes which reinforcer should be chosen given particular local parameters of reinforcement. Furthermore, once the time-window concept is taken into account, the generalized matching law and maximization make identical quantitative predictions for the self-control paradigm. The local delay models have been modified in order to describe more molar effects, and molar maximization has been modified in order to describe local effects.

7. The theoretical analysis

This causal analysis has demonstrated that sometimes organisms show self-control and sometimes they are impulsive. The three different models have therefore all had to develop ways of describing and predicting this variable behavior. All have had to describe the effect of the physical values of the reinforcers and, because this was insufficient, to incorporate the effects of other stimuli, experience, and constraints on self-control. Different models have focused on different factors, but all have developed enough flexibility to be able to describe most instances of self-control and impulsiveness. For example, Mischel's social learning theory did this through the use of hot and cool thoughts, the matching law through the use of free-parameter exponents, and molar maximization through the use of the time-window. The question remains, however, whether there might be some mechanism, common to all of the models, that is responsible for whether self-control or impulsiveness is shown.

Evolutionary theory can provide such a mechanism. It has already proven useful in some areas of behavior analysis and learning (see, e.g., Pierce & Epling 1984; Revusky 1985) as well as perception (Shepard 1984), and it is a theme that occurs repeatedly in the work on self-control. Because work on self-control frequently involves choices between food reinforcers of different sizes and delays, the question of which alternative will better sustain survival and/or maximize total food intake is inevitable. Evolutionary theory is therefore already a part of all three of the models.

For example, aspects of Mischel's social learning theory may have an evolutionary basis; his hot and cool

thoughts may be physiologically adaptive. It has recently been shown that, at least in some people, the sight of food causes insulin to be released, which can increase hunger, and it has been suggested that this insulin release may be conditioned so that it follows previously neutral stimuli (Rodin 1981). Hence any stimuli, such as Mischel's hot thoughts, that would be expected to cause the insulin release, would also be expected to decrease the ability to wait for food. If an organism's species evolved in an environment lacking in abundant food sources, it is adaptive that food be taken whenever it is available, and that stimuli closely associated with food's energy-providing qualities increase the probability of food consumption. Therefore, to maximize survival, choice behavior should vary according to both hot and cool thoughts.

Evolutionary theory is integral to molar maximization, which arises from biology. Organisms are assumed to survive better if they maximize over long periods of time, unless constraints prevent them from doing so. Some researchers (e.g., Herrnstein & Vaughan 1980; Houston & McNamara 1988) have argued that many organisms often fail to maximize but follow the matching law because matching frequently results in maximization and is a relatively simple behavioral rule that requires less cognitive ability to follow than does maximization. In other words, these researchers are arguing that natural selection would be more likely to select for a simple rule or rules that often result in maximization than for a complex set of rules that always result in maximization (see also Krebs et al. 1983).

To identify the common mechanism in these models, it is helpful to consider whether there could be situations in which impulsiveness might be adaptive. There are at least two such situations. First, there are cases in which an organism will die unless it receives a certain amount of food within a relatively short period of time (the lethal boundary effect; Barnard et al. 1985; Houston & McNamara 1985; Stephens 1981). An example of such adaptive impulsiveness comes from the work of Caraco (1983; Caraco et al. 1980), who showed that food-deprived sparrows and juncos were more likely to choose a "risky" alternative that delivered sometimes a large amount of food and sometimes a small amount rather than a "sure thing," an alternative that always delivered a medium amount of food. Second, there are cases in which the environment is not constant (Barnard et al. 1985; Houston & McNamara 1988; Kagel, Green & Caraco 1986), and thus waiting for the larger reinforcer is unlikely to result in receipt of that reinforcer. There are several ways such a situation might arise. For example, suppose a bear chooses to wait for the berries on a large bush to ripen rather than going to the other side of the mountain where there is a small bush that has ripe berries now. During the delay period, the bear might be interrupted because it had to go find a mate, or because it was killed by a hunter, and thus may not end up being able to eat the ripe berries. During this same period the semi-ripened berries might be eaten by birds, or they might be destroyed in a big storm. Finally, the ripe berries might or might not appear at the end of the waiting period (the berries on some bushes do not ripen no matter how long you wait).

Self-control would be adaptive when immediate food intake is unnecessary, and long-term survival is of paramount importance (Christensen-Szalanski et al. 1980). In addition, if the environment is so constant that an organism can be sure of what reinforcers will be available and when, then it is adaptive to wait, if waiting brings more food (Menzel, submitted).

According to the above analysis, then, evolution should have resulted in self-control and impulsiveness exhibited according to the organism's needs and the characteristics of its environment. For natural selection to operate in this manner, however, the conditions described above must have occurred repeatedly over many generations. Unadaptive behavior in an unusual laboratory situation is not a disproof of the evolutionary basis of impulsiveness and self-control. For example, the fact that pigeons are apparently insensitive to variation in postreinforcer delays in the laboratory is not necessarily a problem for the pigeon in its natural environment. In the laboratory it is possible to vary D_i independently of F_i by varying T_i, and this is done frequently in experiments on self-control using an operant conditioning paradigm (e.g., Ainslie 1974; Ainslie & Herrnstein 1981; Green et al. 1981; Logue & Mazur 1981; Logue & Pena-Correal 1984; Logue et al. 1984; Logue et al. 1986; Mazur & Logue 1978). However, in the wild, a reinforcer that has a longer D_i may be less frequent overall as well. Therefore, in the wild, in many cases, organisms may have been able to maximize reinforcement and to survive quite well by being sensitive only to D_i and F_i. A time window that does not encompass T_is may be a significant handicap for pigeons only in the artificial laboratory.

Table 3. *Evolutionary mechanisms common to the impulsiveness and self-control predicted by the three models*

Model	Examples of models' descriptions of subjects	Evolutionary mechanism
Situation A: Impulsiveness		
Mischel's social learning theory	hot thoughts	increased survival if:
Herrnstein's matching law	relatively great sensitivity to D_i	(1) need reinforcer for immediate survival
Molar maximization	small time window	(2) environment not constant
Situation B: Self-control		
Mischel's social learning theory	cool thoughts	increased survival if:
Herrnstein's matching law	relatively great sensitivity to A_i	(1) long-term survival most essential
Molar maximization	large time window	(2) environment constant

Table 3 summarizes both how the three models would typically describe subjects showing self-control or impulsiveness, and the evolutionary mechanism that might underlie these descriptions. Note that according to this analysis neither self-control nor impulsiveness is "good" in any absolute, adaptive, sense. What is adaptive depends on the particular situation for a particular organism. Organisms may therefore have evolved to show self-control in some types of situations but impulsiveness in others.

To predict whether an organism is likely to show self-control or to be impulsive in a particular situation, it is accordingly necessary to have some knowledge, or some inferred knowledge, of its evolutionary history – the kinds of situations to which it has been exposed over past generations. For example, one could predict that a species such as the pigeon, whose survival depends on constant intake of food because of a high metabolic rate, whose food supply is variable, and which does not have to stop foraging during the night, should be consistently impulsive (Houston & McNamara 1988).

8. Conclusion

The investigation of self-control has proven to be a research area in which seemingly disparate lines of research – social learning theory, operant conditioning, economics, and evolutionary theory – can come together under one integrating framework. Research in all of these areas can be described by a common procedural terminology and has involved the investigation of similar causes of self-control, calling for models with similar principles and requiring similar modifications. Further, this research has generated findings that can all be explained by a common underlying evolutionary mechanism.

Given this underlying mechanism, each of the three models can be seen as predicting what behavior will maximize survival within a self-control paradigm. However, each model emphasizes different stimuli as controlling this behavior: The matching law makes quantitative predictions as a function of pre- but not postreinforcer delay; Mischel's social learning theory is similar to the matching law but is not quantitative and is concerned with thoughts – or conditioned stimuli – arising from previous experience with food; and optimal foraging theory makes quantitative predictions as a function of both pre- and postreinforcer delay.

The descriptiveness and predictiveness of each of these models in a particular situation are therefore determined by the constraints that a subject brings to that situation. Organisms' behavior is a function of the perceived, and not necessarily the actual, physical characteristics of the reinforcers. These perceptions are a function of the subject's phylogeny and ontogeny, as well as of the current environment. If, for whatever reason, a subject is sensitive to pre- but not postreinforcer delays, such as is usually the case with pigeons but not humans, then the matching law provides a powerful description of the subjects' behavior. If, on the other hand, a subject is sensitive to both pre- and postreinforcer delays, then maximization is more powerful. Finally, if the subject has verbal behavior, and particularly if instructions are given concerning this verbal behavior, then Mischel's model can also be useful. Other models representing other types of constraints may prove helpful in addition to the three discussed here. Similarly, in the field of perception itself, evolutionary theory has been suggested as a framework for understanding why subjects' behavior conforms to different models of perception under different conditions, with perception describing the constraints on the subjects' behavior (Shepard 1984).

There has been an increasing need to model quantitatively functions that represent the indirect influence of the environment on behavior, and the ability to accomplish such modeling has improved. In fact, the generalized matching law, emerging from the behaviorist tradition, is now quantitatively modeling concepts such as perceived reinforcement that have previously been considered to belong to cognitive psychology. This suggests that behaviorism and cognitive psychology may not really be so far apart after all (see Dinsmoor 1984; Killeen 1984; Logue 1982; 1985a; 1985b; 1985c; Wasserman 1983; Williams 1986). Research on self-control may be particularly suited to accomplishing such integrations because of the large number of conditions under which self-control varies, and because it is possible to study self-control quantitatively. Defining the study of self-control as a diverse yet integrated research area rather than an idiosyncratic paradigm that arose in operant conditioning pigeon laboratories, encourages us to take advantage of all good science in describing and predicting self-control, rather than just to advocate a particular theoretical position. An eclectic approach can advance the science of behavior.

ACKNOWLEDGMENTS
Preparation of this paper was supported by NSF Grant BNS-8416302, A. W. Logue Principal Investigator. Helpful comments by G. Ainslie, J. Dinsmoor, D. Glass, D. Gleiser, G. Heyman, G. King, C. Logue, E. Menzel, M. Peterson, M. Rodriguez, and several anonymous reviewers are very much appreciated. Some of the material in this paper was presented as an invited address at the annual meeting of the Association for Behavior Analysis, Columbus, Ohio, May 1985.

Open Peer Commentary

Commentaries submitted by the qualified professional readership of this journal will be considered for publication in a later issue as Continuing Commentary on this article. Integrative overviews and syntheses are especially encouraged.

Matching is the integrating framework

George Ainslie
Jefferson Medical College, Philadelphia, Pa. 19107; Veterans Administration Medical Center, Coatesville, Pa. 19320

The basic behavioral puzzle implied by the term "impulsiveness" is, "why do organisms sometimes fail to maximize their expected reward in situations where they are familiar with the reward contingencies?" The puzzle implied by the term "self-

control" is, "why does this failure only sometimes occur?" Of the three schools of thought Logue discusses, only two are sufficiently microscopic to make mutually exclusive predictions. Social learning theory is grossly compatible with both matching and maximizing, although the struggle for self-restraint apparent in many of Mischel's (1981b) subjects suggests preference reversal and hence matching. (Why should a child have to adopt a strategy like distraction of attention or "cool thoughts" to get himself to keep preferring the reward he prefers initially, unless he anticipates a change of preference?)

Matching and maximizing are distinct, incompatible theories, each of which handles one of the above-mentioned puzzles in a simpler way than its competitor. Maximization theory holds that organisms naturally show self-control; it has great difficulty accounting for impulsiveness. Since Western civilization has generally assumed, implicitly or explicitly, that maximization is the rational principal of decision making, theorists have been at some pains over the years to account for impulsiveness. None of the many proposed mechanisms of impulsiveness has been adequate to account for modern behavioral knowledge about choice making (Ainslie 1984 and forthcoming, chapter 2). The mechanism that Logue chooses, the time-window, is inadequate because it does not account for precommitting behavior. In some cases an organism may not respond to distant rewards because it is short-sighted, but what can a maximization theorist say about organisms' attempts to forestall their own behaviors specifically so as to get delayed rewards? Logue cites experimental examples (Ainslie 1974; Rachlin & Green 1972) of behaviors controlled by delayed rewards, with the sole purpose of counteracting a more proximate reward, but she does not seem to see them as difficulties for the time-window hypothesis.

This is not her failing alone. Maximization theorists in economics cannot explain why a rational person should take Antabuse (disulfiram) to prevent drinking alcohol rather than simply deciding to stay sober; but almost all economists are loyal to maximization theory. It seems that the alternative to utility maximization widely offends intuition.

The alternative is matching: The matching law says that organisms will naturally be impulsive. The problem for this approach is how organisms, particularly people, sometimes achieve maximization. Logue also raises the question of how a formula without empirical constants can account for individual differences in time discounting; however, postulating innate differences by such means as hers (Formula 2) or Herrnstein's (1981) will solve this problem without weakening the matching hypothesis.

Logue's proposal for how an individual organism moves from impulsiveness to self-control involves learned changes in the function by which it discounts delayed events. This is a shakier hypothesis. A process that is learned presumably depends on reward; if an organism's reward process is itself shaped by reward there is the potential for an awkward positive feedback system in the mechanism. Any hypothesis that organisms such as those in Logue's fading experiments learned to modify directly their basic discount rates must deal with the question of why such learning had not already been shaped maximally by ordinary experience. That is, if an organism can learn to make waiting less aversive – perhaps by making distant rewards seem closer or, as Logue suggests, by making time seem to go faster – such learning should be intrinsically rewarded, not just by a shaping experiment, but by all experience with all rewards the organism has encountered since birth.

The matching law predicts a phenomenon with the principle features of will power, which I have described at length elsewhere under the name "private rules" (1975; 1984). In essence, it is the organism's use of its current choice behavior as information predicting the outcome of a whole category of similar choices in the future. It would allow an organism to approach maximizing without modifying its discount function. However, maximizing would never become a simple preference; continuing activity would be necessary on the part of the organism, and cessation or insufficiency of this activity would lead to episodes of uncompensated matching, that is, impulsiveness.

It has proven remarkably difficult to do controlled experiments on this hypothetical mechanism of will power. Pigeons, although not to be ruled out a priori as participants in this process, have shown no sign of it so far (Ainslie, in preparation). And, as Logue has observed, human subjects show little trouble maximizing once they understand the contingencies of reward in an experiment. It is possible to study the cognitions hypothesized to maintain will power by using an indirect model, a repeated prisoner's dilemma game in which the payoff matrix duplicates the one hypothesized for intertemporal conflict (Ainslie 1988); but this does not provide evidence that individual subjects actually use private rules to move from apparent matching to apparent maximizing.

If the long tails of the matching law hyperbolae do in fact lead organisms to learn some means of approaching maximization, that process represents a bridge that might make an organism adaptive in both of the evolutionary situations Logue describes: In an unfamiliar environment, extreme preference for immediate reward will motivate a simple organism to seize its main chance, just as she hypothesizes. But in a familiar environment, the discount curves' long tails will motivate an adequately intelligent organism to control these primitive preferences for a bird in the hand, preferences the organism can learn to identify as impulses. "Even counting the cost of [intertemporal] conflict, a combination of rapid learning favoring the earlier reinforcer and countervailing slow learning favoring the later reinforcer probably reaps a greater proportion of the available reinforcement than the learning that could be based on an exponential or other noncrossing curve" (Ainslie & Herrnstein 1981, p. 481).

On the careful use of ecological models

Thomas Caraco

Behavioral Ecology Group, Biological Sciences, State University of New York, Albany, N.Y. 12222

The self-control paradigm oversimplifies many real-world problems concerning the magnitude and temporal patterning of rewards. However, the paradigm's interdisciplinary generality makes the associated questions interesting and important.

Few readers will argue with Logue's qualitative conclusions concerning the evolutionary ecology of self-control, discussed in sections 6 and 7 of the target article. The mechanistic tactics governing behavioral choices over temporal distributions of rewards will surely differ across species and across environments within species; conspecifics within a given environment will differ as a consequence of variation in experience or genotype. But the target article lacks sufficient rigor to substantiate some of its conclusions about quantitative models for choice behavior. Logue intended the target article, apparently, to appeal to a broad audience (a reasonable objective). However, breadth has exacted a cost; the resulting inattention to technical and mathematical detail diminishes the paper's chance of effectively synthesizing ecological and psychological perspectives on choice behavior.

Restricting my comments to food rewards, I hope I can supplement Logue's sometimes imprecise discussion of foraging theory. At first it struck me as a semantic oddity that Mischel's model and the matching formulae would be cast as alternatives to foraging theory, which encompasses a diverse array of models. Then Logue equates foraging theory with a deterministic

model for dietary choice in which food items are discovered one at a time (sequentially), so that different food types are never encountered concurrently. An appropriate ecological model for the operant analogues to foraging cycles depicted in Figures 2 and 5 involves simultaneous encounter with two items differing in both reward size and in delay due to pursuit or handling (Caraco 1985; Stephens & Krebs 1986; see below). For an ecological discussion of self-control in foragers encountering prey sequentially, see Kagel, Green, and Caraco (1986).

The target article's third main section categorizes reinforcement and foraging theories by comparing momentary and molar maximization. Stephens and Charnov (1982), Turelli et al. (1982), and Kagel et al. (1986) examine this comparison as it applies in evolutionary ecology. The fourth section introduces the theories themselves; the discussion of molar maximization contains some minor, but avoidable, errors. For example, Logue incorrectly defines λ as the inverse of the expected length of a foraging cycle (cycles/time). Actually, λ is the rate of encounter with food while the forager is searching (and not pursuing or handling); λ has units of food items/unit search time. Handling times are also incorrectly defined in the same discussion. These mistakes do not warrant rejection of Logue's qualitative conclusions, but they could confuse a reader attempting to find parallels between foraging cycles and operant procedures for the first time.

I don't think Logue recognizes that when a forager encounters two or more "prey types" simultaneously (as in Figures 2 and 5, and in similar concurrent reward schedules) molar maximization need not always imply waiting for the larger but more delayed reward. The simultaneous encounter model can explain some observed patterns of impulsiveness and self-control when reward/delay choices are presented concurrently (Stephens et al. 1986). That is, simultaneous-encounter models that solve for the preference behavior maximizing the ratio (expected energy gain per cycle/expected cycle duration) do not always predict self-control. The most efficient strategy depends on the expected time spent searching per encounter (see Stephens & Krebs 1986). Impulsiveness can sometimes be "optimal" with simultaneous encounter and dichotomous choice; it is not necessary, although it is sufficient, to invoke a constraint on memory. This ecological result weakens some of Logue's claims concerning local and molar maximization.

In Section 7 Logue cites observations of risk-prone preferences over variance in reward size as evidence for adaptive impulsiveness. These data, some of which were collected in my laboratory, have nothing to do with impulsiveness as it is defined at the beginning of the target article. I do agree with Logue's contention that the uncertainty associated with delayed rewards in nature may lead foragers to discount future rewards, and discounting can produce self-control/impulsiveness responses with both sequential and simultaneous encounters (Kagel et al. 1986; Zabludoff et al. 1988).

Logue concludes with an interesting discussion of models as predictive and descriptive devices. Foraging theory seeks to predict behavior by generating falsifiable hypotheses deduced from assumptions about adaptation under constraint. Descriptive models, however, may provide a useful context for organizing information. Generally, a forager's effective evaluation of reward/delay combinations will depend nonlinearly on environmental variables (generating Logue's unobservables, but not necessarily implying a "lack of one-to-one" correspondence [sect. 6, para. 3] between rewards and value). There are good biological reasons for these nonlinearities (e.g., Caraco 1980; Houston & McNamara 1988; Mangel & Clark 1986; Staddon & Reid 1987; Stephens & Charnov 1982).

Logue raises some intriguing questions and makes some insightful qualitative conclusions. I'm less enthusiastic about the discussion of quantitative models.

On goals, perceptions, and self-control

Charles S. Carver
Department of Psychology, University of Miami, Coral Gables, Fla. 33124

I applaud Logue's attempt to integrate across the boundaries of distinct research traditions and the constructs used by theorists in those traditions, but I feel that one important theoretical stance is missing from this discussion. Its omission is not surprising, inasmuch as it apparently has not been applied directly to the case at hand. Nevertheless, the conclusions reached by Logue seem eminently compatible with analyses of behavior based on the principles of feedback control (see e.g., Carver & Scheier 1981; Powers 1973; Scheier & Carver 1988).

Why do I say this? The "causal analysis" that Logue uses to integrate the approaches under discussion rests on a specific assumption (see the fourth paragraph of section 6). The assumption is that the degree of self-control exhibited by an organism depends on what conditions the organism *perceives* as existing, rather than on what conditions *actually* exist. This critical assumption allows Logue to account for the observed range of human and infrahuman behavior (even failure to maximize fits the pattern if subjects haven't realized they aren't maximizing), and to reconcile the three theoretical traditions.

This assumption – that perceptions are more important than reality – may be anathema to behaviorism, but it is fundamental to control theory. William Powers, an early proponent of control theory as a model of behavior, has consistently stressed the importance of perceptions. Indeed, the title of his 1973 book, *Behavior: The Control of Perception*, was chosen to emphasize the idea that behavior occurs in the service of perception, that is, behavior is an effort to cause a current perception to come into conformity with a desired perception.

In this view, to understand an organism's behavior requires one to understand two things: (1) what perception the organism is trying to create (i.e., what its goal is), and (2) possible influences on its current perceptions (i.e., perceptions of its present condition with respect to that goal). Let us consider the importance of these two perceptual qualities, in turn, for the cases that Logue addressed.

Goals. Logue did not deal explicitly with goals as a concept, but it is relatively easy (and I think important) to impose this concept on the research. Organisms in the situations discussed by Logue typically have one of two goals (i.e., are attempting to create one of two perceptions): In the case of repeated cycles of decision and consumption (i.e., in the operant and foraging paradigms), the implicit goal is the maximization of outcomes over a period of time (I will ignore the question of whether organisms really are maximizing or whether they are instead "satisficing"). In the Mischel paradigm, in which repeated cycles do not occur, the implicit goal is the acquisition of a more-desired outcome instead of a less-desired outcome.

These two goals are not identical, and I suspect that the difference between them is more important than Logue credits it with being. Consider an adult human in the Mischel paradigm, offered a choice between Chicago's finest pizza in eight hours versus a nutritionally and calorically superior portion of gruel now. A person who prefers the pizza and is not starving will probably display self-control, despite the fact that doing so represents a clear failure to maximize (in the optimal foraging sense). Indeed, some people would exercise self-control in order to obtain two hours in a Broadway theater (or a punk-rock establishment, or a freezing football stadium) later on, rather than receive immediately the biologically more useful gruel.

In other circumstances, of course, the same people would choose the gruel now. There are two points here: (1) It matters what the person's goal is, and (2) there can be a considerable difference between the goal of maximization and the goal of

holding out for something you really want instead of settling for something you don't really want. The only way to merge these two categories is to treat the concept "prefer" as being identical to the concept "biologically useful." A tendency to assume such an equivalence is in fact implicit in Logue's target article (e.g., treating preferred reward as equivalent to length of access to a food hopper – see Figure 1). Such an approach seems to me, however, to raise difficult questions (which space limitations preclude addressing), and is therefore to be adopted only with great caution.

Perceptions. And what about perceptions of present conditions? Logue's integration was framed in terms of a "translation of actual into 'perceived' reinforcement." The main point, of course, was that the organism's construal of its current and impending outcomes is more important than the objectively assessed schedule of outcomes. The language used to make this point, however, also suggests that there are various kinds of bias or distortion in organisms' perceptions of their present level of performance (i.e., how well they are doing).

Biases in this sort of perception clearly exist. For example, Logue discussed a limitation on the "memory window" within which certain organisms can integrate the meaning of events. This limitation prevents them from perceiving that their actions are failing to yield maximization. To the best of their ability to tell, they *are* maximizing. As another example that relates more to human self-regulation, recent work in our laboratory indicates that socially anxious people perceive greater disfavor in the facial expressions of conversation partners than do people who are less socially anxious. This bias influences (adversely, in this case) the perceptions these people have of how well they are attaining their self-presentational goals.

Once we take the perceptions of the organism into account, as Logue concludes we must, many other things fall into line. To consider just one more example, if a nonhuman subject in an operant lab perceives as its choice a small reward now versus nothing at all (as Logue put it), it should be no surprise that the subject acts impulsively and takes the small reward now. In short, Logue's key assumption answers many questions. To repeat, however: The assumption also renders Logue's integration well suited for further integration with control theory.

Evolution. One final point: Though I find Logue's efforts at integration interesting, what is termed the "theoretical" analysis – the argument that evolutionary theory provides a mechanism for determining the choice of self-control versus restraint – is less compelling. Logue proposes that evolutionary pressures toward self-control and toward impulsiveness built each tendency separately into the behavioral repertoire. Unfortunately, the argument as framed seems to require that every category of action evolve separately. Though I would not dispute the idea that evolution played a role in the phenomena under discussion, it seems more reasonable to assume the evolution of a more abstract quality: the ability to integrate the meaning of events over varying time periods (which would handle the cases addressed by Logue). Such an ability would have adaptive value for more than regulation of food intake; selection for such an ability could thus have taken place over a wide range of circumstances, including the two addressed by Logue.

ACKNOWLEDGMENT
Preparation of this commentary was facilitated by NSF Grant BNS87-17783.

Perception and learning in self-control

Robert Eisenberger
Psychology Department, University of Delaware, Newark, Del. 19716

Logue has done an admirable job comparing three distinctive theoretical approaches to self-control, the proponents of which would benefit from paying greater attention to one another's work. The lucid descriptions of Mischel's social learning theory, Herrnstein's matching law, and optimal foraging theory are accompanied by a careful presentation of experimental evidence. Moreover, there is considerable heuristic value in Logue's framework for appraising similarities and differences in the experimental procedures used in the three approaches. Logue's method of analysis can be used to generate new ways to test each theory, as well as allowing judgments concerning the commensurability of the data gathered in support of the three views.

Logue has also made an ambitious attempt to unify the three approaches within an overarching evolutionary theory. Here she faces greater obstacles, perhaps insurmountable ones. It seems questionable whether any such integration is possible, given the limited current understanding of the evolution of behavioral processes.

Any general evolutionary theory of self-control would have to explain the influence of animals' past experience, including the adaptive value of learning processes. Logue suggests that past experience influences self-control by affecting "perceived delay." She suggests that such an explanation would be consistent with all three approaches, each of which "would predict that any manipulation that would make time to reinforcement seem to go faster . . . should increase self-control." In addition, "perception is used here as a hypothetical, unobservable construct that simply represents the observable influence of various factors on the relationship between behavior and reinforcers."

But if, as the preceding statement suggests, "perceived delay" is treated simply as a label for systematic effects of prior experience, the implied surplus meaning of the term has no explanatory value. Hypothetical constructs go beyond empirical laws by making assertions concerning underlying processes. An example of a very useful hypothetical construct is conditioned inhibition, which has provided a number of novel predictions. Logue does seem to have surplus meaning in mind for "perceived delay" because she writes of the speed with which time seems to pass. Logue's analysis might be extended by considering the underlying processes implied by experience-based changes in perceived delay.

Consider how perceptual learning might mediate individual differences in self-control. There is evidence with pigeons, rats, and children that long delays of reinforcement increase the subsequent frequency of choosing large-late reinforcers over small-early reinforcers (Eisenberger et al. 1982; Eisenberger & Adornetto 1986; Mazur & Logue 1978; Logue et al. 1984; Mischel & Grusec 1967). A perceptual-learning explanation of these findings would need to make explicit assumptions concerning the effects of accustomed delay on the subsequent perceived duration of short, as well as long, time intervals.

Assume that repeated delays of reinforcement reduce the subsequent perceived duration of long intervals, with little effect on short intervals. Such a perceptual-learning process provides a credible explanation of increased self-control following repeated delay of reinforcement. However, alternative interpretations are also plausible. For example, Mischel and Grusec (1967) proposed an adaptation level for delay, with long delays reducing the aversiveness of subsequent delays. Another possibility is that delayed reinforcement counterconditions frustration, a view that has been used to explain the enhanced resistance to extinction following delayed reinforcement (Wong et al. 1974).

How might one distinguish experimentally among these alternative interpretations? The perceptual-learning account seems to imply that accustomed long delays of reinforcement would impair subsequent psychophysical judgments involving delay. Such evidence would be necessary to differentiate learned changes in perception from other possible mediating processes.

A general evolutionary theory of self-control would have to explain the adaptive significance of experience-based changes in self-control. What environmental pressures are responsible for the genetic readiness by pigeons, rats, and humans to increase self-control following delays of reinforcement? Although one might speculate as to the answer, evolutionary theory is simply not sufficiently developed to derive this relationship.

The derivation of empirical laws of learning from evolutionary theory is especially difficult because any particular empirical law need not have a direct evolutionary advantage. A given empirical law may reflect some more-general process favored by evolution. For example, the effects of delayed reinforcement on subsequent self-control might be due to an evolutionary advantage of perceptual learning involving delay, an adaptation level for delay, the counterconditioning of frustration, or some other mechanism. It is unclear at the present time which of these processes best accounts for the effects of delayed reinforcement on subsequent self-control or why any such process would be favored by evolutionary pressures.

Although plausible evolutionary bases of specialized learning processes have been suggested for species-specific adaptations to a distinctive environmental niche, evolutionary explanations of more general kinds of learning are less easily discovered. Evolutionary interpretations of many empirical laws of learning may have to await a better understanding of the underlying psychological processes.

Foraging for integration

Edmund Fantino and Ray Preston

Psychology Department, University of California, San Diego, La Jolla, Calif. 92093-0109

Logue has provided a useful integrative review of research and theory in self-control, and a potentially productive rapprochement between three fields with common interests. Before contributing two additional points of commonality between behavioral psychology and behavioral ecology we address a concern about the incorporation of "perceived reinforcement" into the explanatory apparatus of the three models. We would avoid referring to differences in sensitivity of individuals or species to reward parameters as differences in "perception." Some of the reasons for doing so are presented by Logue in her discussion of the term "self-control." But, whereas the term self-control subsumes a larger set of phenomena, the term "perception" adds nothing to the present discussion. We are not persuaded by the argument that perception is of a kind with molecular chemical explanations of molar chemical properties. Although the viscosity of a substance is sometimes described in terms of molecular structure, it is never described in terms of a substance's perceptions of gravity or aperture size, or pressure at an aperture. Until the relevant structural properties were identified, chemists made do with descriptions of tendencies to flow – the meaning of the parameters was left to future generations. Our argument is not that we should stick to observables but that the term "perception" is redundant with the observed differences in subjects' responses to reward parameters.

As Logue notes, the delay-reduction hypothesis (Fantino 1969; 1977) has been applied to choices between reinforcers of differing delays and amounts. In self-control, preference for the smaller reward decreases with increasing (but equal) delays (Navarick & Fantino 1976). Similarly, in a foraging simulation, Ito and Fantino have shown that acceptance of the smaller reward decreases with increasing (but equal) handling times (Ito & Fantino 1986; or see Figure 9 in Fantino & Abarca 1985). Moreover, the basic inequality of optimal foraging theory, introduced by Logue in her section on molar maximization, may also be derived from the delay-reduction hypothesis. Since this derivation has already appeared in *BBS* (Fantino & Abarca 1985) we will not review it again here. Our point in the earlier article was similar in spirit to that of the present article: A principle of decision-making evolved in the operant conditioning laboratory is consistent with decision-making in situations sharing crucial properties with naturally occurring foraging.

In addition, we show that a recent model of optimal foraging is very close conceptually to research and theory in self-control, and in a way that highlights Logue's distinction between local delay and molar maximization models. Up to now, simulations of foraging in operant conditioning laboratories have concentrated on successive-encounter procedures in which isolated prey are accepted or rejected sequentially (e.g., Abarca & Fantino 1982; Collier & Rovee-Collier 1981; Lea 1979). These studies have assessed predictions of the optimal diet model which emphasizes the "profitability" of each predation decision. Foragers should maximize profitability expressed as energy obtained per prey capture divided by time spent handling it (E/h). However, behavioral ecologists have recently developed simultaneous-encounter models of foraging which differ from those presented in the target article. These models attempt to describe choice between simultaneously encountered, mutually-exclusive prey (Engen & Stenseth 1984). There are circumstances in which choice of the nominally more profitable prey (i.e., higher E/h ratio) should not maximize net benefit to the organism (i.e., total energy gain divided by total time in the situation). In such circumstances, will the subject choose the more profitable prey (corresponding to a local delay model) more or less often than one that increases long-term energy gain (corresponding to molar maximization)?

Consider an experiment beginning with a search phase during which the subject is required to respond to a white key light (on the center of three keys) for at least T sec before encountering prey. The first response on the white key after T sec has elapsed extinguishes the white key light and produces concurrent red and green key lights on the side keys. The first response on either colored key commits the subject to that choice and darkens the other side key. There is a value of T such that:

$$\frac{E_1}{(h_1 + T)} = \frac{E_2}{(h_2 + T)} .$$

Solving for T we see that, in general, indifference should occur when

$$T = \frac{E_1 h_2 - E_2 h_1}{E_2 - E_1} .$$

For example, consider a condition in which E_1 = 4 sec of food access; E_2 = 6 sec of food access; h_1 = 10 sec handling time and h_2 = 20 sec handling time. If these outcomes are presented simultaneously to a subject without search time, that is, with T = 0, the subject should always choose the more profitable alternative 1 (since E_1/h_1 = .4 and E_2/h_2 = .3). But as T is increased, an indifference point is reached – the equation for T is solved with T = 10 sec. Search times shorter than 10 sec should result in preference for E_1/h_1; search times longer than 10 sec should result in preference for E_2/h_2. Will subjects maximize energy per unit time, as required by our simplified version of the simultaneous-encounter model, or will they consistently prefer the alternative with the higher profitability ratio even when this alternative provides lower long-term gains (i.e., with T > 10 sec in the example given)? Will the results depend upon the species studied, that is, will humans be more likely than pigeons to maximize energy per unit time? Our pilot results with both humans and pigeons do not implicate such a species difference: Humans and pigeons both appear to conform, albeit in a rough way, to the simultaneous-encounters

model. The results not only suggest that the simultaneous-encounters model may provide a promising framework for appreciating self-control in settings different from those addressed by the models Logue considers, but they also underscore the commonality she stresses between approaches from the behavior analytic and behavioral ecology traditions (Fantino 1985).

ACKNOWLEDGMENT
Preparation of commentary supported by NIMH Grant MH-20752 to the University of California at San Diego.

Self-control in context

Leonard Green and Edwin B. Fisher, Jr.
Department of Psychology, Washington University, St. Louis, Mo. 63130

From the writings of Homer and the authors of the Bible to Freud's theorizing about the incorporation of cultural standards through identification with the Oedipal father, self-control has been thought to be something within the person that counteracts external temptations. The three models Logue reviews all explain self-control in terms of its contexts in evolution, rewards varying in delay and amount, and a variety of situational characteristics. Explaining the intrapersonal in terms of contexts, turning the inner outer, constitutes major progress. Self-control, formerly thought an irreducible quality of good character or good breeding, we see now as the orderly and mutable result of observable and manipulable variables.

Temporal contexts and discount functions. There is now a reasonable body of evidence to suggest that organisms discount, or devalue, future rewards, and that the degree of discounting is a function of the temporal distance from time of choice. Thus, an organism that chooses a small, relatively immediate reward over a larger, but more delayed reward may come to reverse its preference and choose the larger, delayed reward as the time between choice and delivery of the rewards is increased (see Figure 2, target article). That is, organisms exhibit temporal inconsistencies in preference (Green et al. 1981; Rachlin & Green 1972). There are, of course, large variations in the rate of discounting across species and among members of the same species. What factors account for the individual and species differences in rate of discounting?

Data presented by Mazur and Logue (1978), and discussed in the target article, implicate the role of experience. Pigeons exposed to the "fading" procedure chose the larger, more delayed reward more often than did pigeons who had not experienced the "fading" procedure. Such a result is important, for it suggests that self-control is a learnable behavior. Unfortunately, we do not know what changes, if any, actually occur to the discount function under such training procedures. Mazur and Logue's (1978) results indicate that training can temper the strong discounting of future rewards; Grosch and Neuringer (1981, experiment 6) demonstrated that successful preliminary experiences enhanced the ability of pigeons to choose and wait for preferred, delayed rewards than when they had unsuccessful preliminary experiences. Similar results have been obtained by Mischel (1974) with children.

The role experience may play in modifying the basic discount function needs to be addressed. When pigeons who were trained on the fading procedure were permitted the opportunity, during the delay of the larger reward, to change their choice to the smaller reward, many did so (Logue & Pena-Correal 1984). This suggests that there was no change in their basic discount function. Rather, the birds may have learned some covert commitment strategy during the fading procedure which forestalled their preference for the smaller reward, a strategy that failed when the opportunity to change their choice was provided.

Discounting of delayed rewards is assuming greater prominence in theories of choice and foraging. Moreover, its role has important implications for economic theory (Kagel & Green 1987) and social policy decisions. For example, differences in discount curves can influence people's decisions about whether to save or invest when faced with similar market rates of return. Such learning effects, if embedded in familial or cultural practices, may thus contribute to "poverty cycles." Serious policy implications follow. For example, I. Fisher (1960) has suggested that discounting would be greater at lower income levels. Different kinds of governmental programs would be needed to correct poverty cycles if they are reflections of different discount functions than if they are due to other factors, such as expectancy effects. Decisions about whether to pursue higher education or to drop out and find a job may depend on the effect such discount functions play, and how they may be modified.

Judgments of the optimal as context dependent. That an organism prefers the smaller, more immediate outcome when the time between choice and delivery of the reward is brief has been characterized as a self-control problem – the organism being impulsive, not acting in its own best interest. From an evolutionary perspective, however, the rate of discounting might very well be expected to vary under conditions of different selective pressures. There is inherent uncertainty associated with obtaining delayed outcomes; food may spoil, predators may intervene, and so forth. If the probability of loss increases with time, then overvaluing more immediate outcomes may be an adaptive response in an uncertain world (Kagel, Green & Caraco 1986). This suggests several interesting experimental tests. Does the rate of discounting, and thus the choice between small, more immediate rewards and greater, more delayed rewards, vary predictably as certain manipulations are performed? (1) Will a forager discount the future more sharply as its energy reserve falls toward a critical, survival level? Snyderman (1983b) observed that pigeons selected fewer small, more immediate food outcomes when they were at 95% of free-feeding weight than when at 80% of that weight. Rechten et al. (1983) also observed that birds were more likely to select the smaller but more immediate reward when hungry than when partially satiated. Yet different results have also been obtained. (2) Will organisms without predators discount future rewards less than those who forage among predators? (3) Will discounting be affected by the size of the foraging group? (4) How is an organism's choice between alternative sources of food affected by the mean level as well as the variability of those sources? Unlike with shrews and granivorous birds (Barnard & Brown 1985; Caraco et al. 1980), risk sensitivity in rats appears to remain constant under varying levels of resource availability (Kagel, Battalio, White, MacDonald & Green 1986). More precise and comprehensive models of adaptive behavior encompassing these situations and differing results are needed.

An analysis of what is optimal behavior within a self-control paradigm may also have implications for understanding social problems conventionally (and conveniently) ascribed to intrapersonal sources of self-control. In coming to grips with the higher drop-out rates for certain minority groups, for example, we might do well to look at the differential long-term rewards (employment prospects, salary levels) facing high school graduates within these groups as variables influencing the "optimal" decision to remain in school.

Reinforcers varying in quality. Reward amount and delay are central variables in models of self-control. Logue provides a simple example: "choosing a piece of cake available now over a whole cake available one month from now is an example of impulsiveness, whereas choosing the whole cake is an example

of self-control." Although a clear extension of current research to an everyday choice, this example highlights a shortcoming of that research in generalizing to important instances of self-control. The choice of the person trying to control eating is not between a piece now versus a whole cake in a month, but rather between a piece now (and tomorrow, and tomorrow . . .) versus reduced weight, cholesterol, or blood sugar levels, or increased social rewards for a more attractive appearance in a month. In cases labeled self-control, rewards usually differ as to *quality* and delay.

Mischel's research concerning strategies for enhancing delay illustrates problems in extrapolation to rewards varying in quality. Instructions to think about the consummatory properties of a delayed, preferred food reward *increased* choices of the more immediate food reward during the delay interval (Moore et al. 1976). The implications are appreciable. Should we discourage people from thinking about (savoring, perhaps) the rewards for which they work and persist?

When delayed and immediate rewards are similar (marshmallows and pretzels in Moore et al. 1976), thinking about consuming one might also raise the salience or reduce the discounting of the other. When delayed and immediate rewards have little in common, however, attention to the delayed reward may alter its salience or its rate of discounting without affecting the salience or discounting rate of the more immediate reward. This might enhance performance directed toward the delayed reward. Evidence that attention to delayed rewards may enhance self-control rests in Logue's own research on fading. She suggests that stimuli during delay periods may have served as "'reminders' . . . of the reinforcers to come."

The need to articulate reward quality is not a new issue; J. S. Mill revised Bentham's "hedonic calculus" to incorporate considerations of the quality and not just the quantity of the good. One approach to this issue may lie in the concept of substitutability of rewards (see Rachlin et al. 1981). Self-control may generally entail choices between rewards which our culture at least assumes are low in substitutability. We see little in common – little substitutability – between yielding to the fraternity brothers' beckoning to a beer blast the night before law boards and the delayed reward of a distinguished career in a Wall Street firm. Systematically varying the substitutability of rewards, by varying, for instance, their own characteristics or deprivation relevant to them, may expand our models and increase their generality.

Social contexts. The aid and reassurance of family members, friends, or a confidant may enhance the ability to withstand temptations (Cohen & Syme 1985; E. Fisher 1982; 1986). Experimental models of such influence may expand theories considerably, as well as informing applications. Frequently, the behavior labeled self-control is also of real or perceived value to the group. For instance, obeying laws in the apparent absence of any police surveillance and against immediate self-interest is important to the group and difficult to explain in terms of proximate incentives. Very probably, ethological models may shed light on such phenomena.

The context of other behavior. The concurrent behavior of the individual provides a neglected but probably important context for self-control. The dieter who focuses on eating larger amounts of better foods or adopting a regular schedule of meals will have a very different experience from one who focuses only on caloric restriction. As another example, research indicates that those who have most to "live for," as indicated by education, income, marital status, or general health, are more likely to avoid the temptation of smoking (E. Fisher 1982; 1986). Perhaps having things to live for includes instrumental or enjoyable activities to fill the vacuum of delay intervals which nature presumably abhors. In this regard, current paradigms rely too heavily on passive waiting for delayed rewards. Notably, Grosch and Neuringer (1981) found that providing activity instrumental toward the long-term goal reduced pigeons' choices of temptations.

The context of theory development. The research in self-control has been remarkable, stimulating many further investigations, advancing theory, informing application (e.g., Fisher et al. 1982; McReynolds et al. 1983). What accounts for this success? Each of the models reviewed by Logue has made progress by pursuing interesting questions from its own discrete and coherent conceptual perspective. Rather than quickly adopting explanations from other perspectives, they have found, within their terms, ways of articulating challenging findings. In this regard, the endorsement of eclecticism at the close of the target article should not encourage over hasty borrowing of explanations among models rather than more thoughtful development within them. In fact, we believe the self-control research demonstrates the virtue of pursuing interesting topics within limited and well-defined conceptual perspectives. Rather than borrowing concepts to explain what seems difficult, we expand our knowledge by stretching our conceptual models to encompass new findings. Before the integration of conceptual perspectives which eclecticism presumably seeks, we need a differentiation of those perspectives. Indeed, the researcher may be in a choice situation similar to that of subjects in self-control studies. Faced with a finding hard to explain, one has the choice of the short-term, lesser payoff of an easy explanation through eclectic borrowing, or the delayed, greater payoff of a coherent perspective differentiated to encompass what it had not previously encountered.

ACKNOWLEDGMENT
Supported by NIH grants CA 41703, E. B. Fisher, Jr., Principal Investigator, HL 17646, B. E. Sobel, Principal Investigator, and AM 20579, J. V. Santiago, Principal Investigator.

The conflicting psychologies of self-control: A way out?

John M. Hinson
Department of Psychology, Washington State University, Pullman, Wash. 99164-4830

Logue is to be commended for her efficient summary of the results from studies within the experimental "self-control" paradigm. The important implications of this body of literature, however, are somewhat different from the points emphasized in the target article. In addition, the framework proposed to integrate various approaches to the self-control paradigm suffers from problems ranging from the definitional to the theoretical.

Definition of self-control. Interest is restricted to a narrow definition of "self-control" as the tendency to choose a larger, more delayed reinforcer over a smaller, more immediate one, whereas "impulsiveness" is defined in a dichotomous fashion as the absence of this tendency. Although this definition seems to have the virtues of clarity and brevity, it is still misleading. The terms "self-control" and "impulsiveness" are infused with surplus implications, and easily lead to the notion of type (or trait) classification of individuals. If no more were meant by the terms than choices involving immediacy and magnitude of reinforcers, then additional terms such as these would be unnecessary. Those who use self-control to describe choice in this paradigm obviously want to extend their analysis to a broader domain.

Yet there appears to be only a surface similarity between self-control in the natural world and its supposed laboratory analogue. Both types of self-control problems are said to arise from a conflict between the immediate and delayed consequences of behavior. Whereas it may seem reasonable to note this sim-

ilarity and proceed with a comparative analysis of the behavior, there is a misleading simplicity to this approach. For instance, am I really showing impulsiveness if I have a single scotch now instead of a double in two hours, or deferring a trip to a nice restaurant so that I may exercise now? Although these examples appear frivolous, they illustrate the fact that the self-management problems faced by normal people in everyday life are not realistically modeled in this paradigm (e.g., Brigham 1982). This is especially true when one is trying to describe qualitatively different activities, occurring on different temporal schedules, with a unitary variable-like value. Finally, it is worth noting that even with a limited definition of self-control, the summary in the causal analysis indicates an embarrassing wealth of factors that potentially control a seemingly simple pattern of choice.

Theoretical analysis. Perhaps it would be best to jettison the conceptual baggage of the terms "self-control" and "impulsiveness" in these studies and merely analyze the relations of choice to immediacy and magnitude of reinforcement. Regardless of the terms used to describe them, these relations are clearly of theoretical interest. Logue describes a theoretical framework which attempts to integrate social learning theory, matching law, and optimal foraging accounts using a common evolutionary mechanism. Unfortunately, the theoretical analysis seems to fall well short of the mark.

The major difficulties are that a *specific* mechanism is not described, and that the putative evolutionary perspective does not provide sufficient depth of integration for the research areas discussed. Instead, it offers a sort of plausibility argument for the diversity of outcomes observed, with choice involving variation in immediacy and magnitude of reinforcers. A more convincing evolutionary analysis would consider in detail the types of natural historical factors which conceivably dispose different species to choose food reinforcers in different ways. Such an analysis would be more useful than restating acknowledged facts, such as the likely relationship between patterns of foraging and the predictability of food resources in the natural environment. Given the difficulty of specifying the contribution to fitness of relevant life history factors (cf. Krebs & Davies 1984), the suggested examples of the potential adaptiveness of self-control and impulsiveness in terms of maximizing survival seem contrived.

Theoretical integration of findings in the self-control paradigm literature is certainly necessary to avoid the fate of other, once-flourishing research areas in the experimental analysis of behavior. The matching law theory offers one possibility, but is of limited value. Whereas this theory can account for differing sensitivities to amount and delay of reinforcers by adding parameters to the generalized matching law, these parameters ultimately need to be given psychological significance, unless this is a curve-fitting exercise. Of the remaining options, an optimality theory seems best suited to explaining the effects of immediacy and amount of reinforcement. Optimality analysis is a framework general enough to explain the dimensions of the environment that control behavior, while also taking into account the constraints brought to the situation by the individual (e.g., Staddon 1983). Furthermore, one need not be committed to a particular view of evolution, or even to evolutionary considerations at all, to apply optimality analysis. For example, in economic theories, maximization of value, or utility, is not necessarily equivalent to maximization of fitness (e.g., Rachlin et al. 1981).

At the risk of oversimplification, much of the relevant literature concerning amount and delay seems to be well characterized by the hyperbolic delay function. And many of the factors which influence choice, such as distraction responses, may be described as changing the *effective* delay to the larger reinforcer. As a relevant environmental dimension, delay fits easily into an optimality analysis. With recent evidence that probabilities can be interpreted as delays (Rachlin et al. 1987) and that probabilistic choice may be controlled by relative delay (e.g., Hinson & Staddon 1983), the optimality approach may be the way out of a potential empirical quandary.

In delay there lies no plenty

Alasdair I. Houston[a] and John M. McNamara[b]

[a]*Department of Zoology, Edward Grey Institute, University of Oxford, Oxford OX1 3PS, England and* [b]*School of Mathematics, University of Bristol, Bristol BS8 1TW, England*

Like Logue, we think that evolutionary considerations can be useful in understanding behaviour in the laboratory. As Logue is aware, a major difficulty is that such explanations depend on a knowledge of the animal's life outside the laboratory.

We agree with Logue that impulsiveness can be adaptive, but her description of such situations confuses various effects. Impulsiveness means choosing a small reward now as opposed to a large reward later. Usually this results in a reduction in the overall rate of gain. Logue talks about impulsiveness with reference to variability. The work of Caraco (1983; Caraco et al. 1980) and Stephens (1981) is concerned with the ability of a bird to survive the night (during which it cannot feed). They consider a situation in which the bird has the choice at a fixed time between two sources of energy that differ in their variability. Since these choices are made at a fixed time, it is not clear that this has anything to do with impulsiveness. McNamara and Houston (1987a) show that preference for variability in the amount of food and preference for variability in the time at which food is found are logically distinct. It can be optimal to prefer variability in the time at which food is obtained in order to survive the night, but it is again not clear that this preference for variability can be equated with impulsiveness. The variable option has a high probability of a short delay until food, but also has a high probability of a long delay.

Logue is right in saying that the danger of starving while foraging (reserves falling to a lethal boundary) can make it adaptive to prefer small, immediate rewards. Perhaps the most obvious case involves an animal that would starve if it waited for the large reward. There are, however, less drastic examples in which behaviour that might be called impulsive would be favoured.

If rewards of magnitude are found as a Poisson process with rate λ, then the overall rate (ignoring handling time) is $\gamma = e\lambda$. If the animal has the choice between two processes with the same rate γ, then it should choose the process with the smaller, more frequent rewards. The basis of this effect is the reduction in variability that results from small frequent rewards – the lethal boundary makes it optimal to be risk-averse. In this case the choice is made between different Poisson processes, perhaps corresponding to different areas in which to forage. An alternative is that the animal encounters each prey type as a Poisson process and has the choice of eating or rejecting an item once it has been encountered. The presence of the lethal boundary makes it advantageous to take all items that yield a positive gain in energy, even if this does not maximize the long-term rate of energetic gain (Houston & McNamara 1985).

As Logue says, the other possibility is that the larger, more delayed reward may not actually be obtained. This uncertainty can make it optimal to be impulsive and to prefer variability in the time at which rewards are obtained (McNamara & Houston 1987a).

We are not always happy with the details of Logue's exposition. For example, the following points can be made regarding her description of foraging theory: Logue says that any experiment involving self-control can be characterised by the four

time periods C_i, D_i, A_i and T_i shown in Figure 1 in the target article. She subsequently identifies the overall rate of reinforcement $F_i = 1/(C_i + D_i + A_i + T_i)$ with the rate λ_i at which prey are encountered in models of prey choice. This identification is not correct, in that it ignores the time taken to handle prey items. In the simple case of only one prey type that is always consumed, the overall rate in the prey choice paradigm is $1/(1/\lambda + h)$.

Logue goes on to give the standard condition for prey choice when there are two types of prey, with type 1 more profitable, i.e., $e_1/h_1 > e_2/h_2$. She states that type 1 will always be chosen over type 2 unless

$$1/\lambda_1 > (e_1/e_2)h_2 - h_1. \quad (1)$$

This is not a very clear version of the prey-choice rule. Type 1 items should always be taken. Type 2 items should be taken if and only if inequality (1) holds.

Perhaps most fundamentally, Logue gives the criterion for molar maximization as that of maximizing the total amount of reinforcement received over a given time while simultaneously minimizing energy output over the same time period. This criterion is not well-defined. The usual criterion is to maximize the difference between reinforcement (energy) gained and energy expended over a given time period – and while we are on the subject of optimality criteria: We do not claim that individual survival is *always* a good approximation for fitness.

Self-restraint: A type of self-control in an approach-avoidance situation

Sumio Imada[a] and Hiroshi Imada[b]

[a]*Department of Psychology, Hiroshima Shudo University, Asaminami-ku, Hiroshima 731-31, Japan and* [b]*Department of Psychology, Kwansei Gakuin University, Uegahara, Nishinomiya 662, Japan*

In ancient times, a Chinese man once said to his pet monkeys that he would give them three pieces of fruit in the morning and four in the evening. As the monkeys got very angry, he told them instead that they would be given four pieces of fruit in the morning and three in the evening. Then the monkeys were very satisfied. This story teaches us that, unless we use our brains, we, too, can be tricked as easily as the monkeys (from a story of Japanese-Chinese folklore, Cho San Bo Shi). In Japan, we have a saying: "An impatient beggar will be given less alms." This, of course, means: "Wait, and you will be given more." A tendency to choose immediately available food seems to be common in animals and human children. But some trained animals and adult humans can wait for a larger reward which will be given later. "A choice of a larger, more delayed reinforcer over a smaller, less delayed reinforcer" is called "self-control" by Logue and other researchers and the opposite choice "impulsiveness."

In her review, Logue analyzes and integrates three different traditions of research on impulsiveness and self-control: Mischel's social learning theory, Herrnstein's matching law (Herrnstein 1970) and optimal foraging theory. Although the integration is beautiful and her efforts to bring otherwise unrelated research areas and theories into the same perspective deserve admiration, we still cannot help feeling a kind of restlessness after reading through the target article. Where does this unstable feeling come from? It may come partly from the difference in meaning between the concept of self-control as operationally defined by Logue and the meaning of the concept of self-control in the everyday sense.

The word "self-control," apart from its delimited technical meaning, reminds us of the word "self-restraint," at least in Japanese culture. One of the most important concepts kept in mind to live adaptively in Japanese society has long been "Wa," which literally means "harmony." But "Wa" implies more than that, namely, "harmony with self-sacrifice and self-denial."It emphasizes the importance of maintaining good, harmonious human relationships, even at the sacrifice of each individual's wishes. We have sayings such as: "A peg which sticks out will get hammered down" and "A pheasant that keeps silent will never get shot." These are in marked contrast with "A squeaky wheel gets more oil." As the above sayings imply, self-restraint has long been considered to be a virtue in our country and one has been discouraged from speaking out too much or becoming a peg that sticks out. Otherwise, one is likely to be punished socially. In order to avoid such punishment, one must control (or put restraint upon) oneself. It therefore seems to be more realistic, at least in our culture, to broaden the concept of "self-control" to mean "not to do (or to refrain from doing) things one wishes to do now for the sake of the benefits in the long run or for the sake of better survival."

The above discussion in a sociocultural context can also be expressed using more technical terms of psychology. The concept of self-control as used by Logue implies self-control in a kind of "approach–approach" situation, whereas we are proposing that the concept of self-control should be more broadly defined so as to cover self-control in an "approach–avoidance" situation. Looking around our environment in a molar way, there are things in this world that we must approach as well as things we must avoid, in order to survive: Our environment contains in it food, water, and energy sources as well as enemies, predators, and natural disasters. An organism cannot survive if it devotes all of its activities to appetitive behavior. It must cope with aversive events and learn to escape or avoid these events properly. It may have to refrain from performing appetitive behaviors for the sake of long run benefits. How can one discuss the survival of organisms without regard to both positive and negative aspects of our environment? In this sense, Logue considers only half the story of self-control. (The story may be less than half, but we cannot think of other types of self-control at the moment. Is there any case of self-control in an avoidance–avoidance situation?)

The approach/avoidance idea developed into experiments (Imada et al. 1983; Imada et al. 1985; Imada et al., in preparation) in which adaptive processes of rats were observed in a situation in which food and water were freely available and in which brief, inescapable electric shocks were also given. We hoped to simulate the natural environment by incorporating both positive and negative elements into the experimental situation. Observations of interplays of appetitive and defensive behaviors were made for 24 hours a day for many days.

We have no objection to the strategy Logue used in reviewing research on self-control. She started with a clear operational definition of the concept of self-control and integrated research which fits this definition. However, to define a concept operationally and objectively is one thing and whether or not the concept thus defined is broad enough is another. Imada and Nageishi (1982), discussing the concept of anxiety, wrote: "The concept of anxiety as operationally defined by Mowrer (1939) connotes only part of what is generally implied by the term anxiety as used in everyday life by nonpsychologists. An expansion of the concept of anxiety in such a way as to include in it both CCER (classically conditioned emotional response) and BEL (basal emotional level) is an attempt to bring laboratory usage closer to everyday usage without losing the objectivity inherent in an operational definition" (p. 574). What we are hoping is that Logue will do such an expansion with regard to the concept of self-control in the future. We believe that Logue's present target article is the first step of more to come. Our guess is that she deliberately avoided using a more broadly defined concept of self-control to avoid confusions and complexities; she may

have thought that it is premature to make any integrative review of research relevant to such a broad concept of self-control at the present stage of knowledge. In any case, it may at least be safer not doing it. A case of self-control by way of self-restraint?

Functional characteristics of human self-control

Julius Kuhl
University of Osnabrück, 4500 Osnabrück, Federal Republic of Germany

Operational definitions are practical but risky. Their practicality increases with increasing simplicity, and so does the risk that they do not define the process one intends to investigate. Delay of gratification seems to provide a good basis for a simple operational definition of self-control. Since pigeons can be trained to prefer a larger, delayed reward to a smaller, immediate reward, it seems justified to say that they show "self-control." I believe, however, that Logue's definition of self-control is grossly oversimplified.

Logue's pigeons learned to *choose* a bigger delayed reward rather than a smaller immediate one. A crucial aspect of commonsense as well as classical and current psychological conceptions of self-control is the ability to *maintain* a choice and resist the temptation to switch to some attractive alternative. In most of Logue's experiments, the pigeons do not even have the choice of switching to the immediate, smaller reward while waiting for the bigger reward. In an experiment (Logue & Pena-Correal 1984, see section 5.2.2. of the target article) in which they were given the opportunity to switch to the immediately available smaller reward during the delay period, they did so.

Although Logue attempts to integrate Mischel's (1974) research on delay of gratification in children with her animal research, she does not discuss Mischel's early discovery that the *choice* of a delayed reward has little to do with the actual ability to delay gratification. This ability is called "self-control" because it demonstrates some independence from the immediate environment. This independence can only be demonstrated when the organism is exposed to environmental temptation and has the *opportunity* to yield to it. The conceptual confusion inherent in Logue's use of the term "self-control" becomes apparent in her comment concerning the observation that pigeons changed their choices when given an opportunity to do so: "The *lack of an opportunity* for the previously fading-exposed pigeons to change their choices (i.e., precommitment) was responsible for their showing *self-control*" (sect. 5.2.2, para. 3; emphasis added).

Based on classical German "will psychology" (Ach 1910), our own research on self-control ("volition") has been guided by an information-processing model of self-regulatory processes (Kuhl 1984). We define self-control (in our terminology: "action control" or "volition") as the ability to maintain an intention against the pressure of competing action tendencies, especially against tendencies that are stronger than the tendency the organism is currently committed to (i.e., its current "intention"). This definition brings out several theoretical problems that must be resolved before we can find an adequate operational definition of self-control. For example: How can an organism perform an activity that is not the strongest among its competing tendencies? This problem can be solved by assuming separate subsystems (or levels of processing) for the representation of "emotional preference," commitment, and executional tendencies (Kuhl & Kazen-Saad 1988). An adequate operational definition of self-control cannot be found until we have a theory that defines the criteria for identifying self-control processes.

According to our theory, six conditions have to be met for an observed behavior to be mediated by self-control processes. There must be: (1) anticipation of two different cost-benefit relations associated with two action alternatives (A_1 and D_1, in Logue's notation), (2) freedom of choice during both the decision-making and the enactment phases (i.e., C_1 and D_1), (3) commitment to one of the action alternatives, (4) difficulty of enactment (implying immediate "emotional preference" for the competing action tendency – that is, the one the organism is not committed to – and functional separation of the competing incentives), (5) execution and maintenance of the action alternative the organism is committed to (until goal attainment), and (6) internal control (*self*-initiation) of measures taken to facilitate maintenance of the commitment. "Functional separation" suggests that integration of the two competing incentives (implied by Logue's modified matching law) does not occur, but that the two conflicting tendencies perseverate as disparate representations producing the continuous conflict and effort typical of human self-regulatory behavior (Ach 1910; Kuhl 1984). It is this aspect of self-control that sometimes causes the typically human mental disorders that are characterized by continuous conflict and "alienation" of one's behavior from emotional preferences (Kuhl & Kazen-Saad 1988). In contrast to Logue's interpretation, our theory suggests that, in many cases, psychotherapy should not increase self-control, but will help clients to resolve the conflict between their commitments and their emotional preferences by achieving integration (e.g., by learning to develop an *emotional* preference for a commitment).

Logue does not present any evidence that these or similar criteria are met in her experiments. In contrast, in Mischel's (1974) experiments, which Logue purports to integrate with her own, careful attempts were made to meet criteria similar to those mentioned earlier. For example, children were tested as to whether they were able to anticipate both the reward and the delay contingencies, whereas Logue conducted 11,000 fading trials to train her pigeons to disregard differential delay contingencies. Disregarding differential delays (or any other positive or negative incentive) during decision-making (i.e., during C_1) is not equivalent to the attentional strategies Mischel's children used during the delay period: Whereas the latter help maintain a previous commitment and resist temptation during D_1, training pigeons to overlook differential delays during C_1 removes the knowledge base necessary to attribute a behavior to a self-control process. [See also Libet: "Unconscious Cerebral Initiative" *BBS 8(4) 1985]*

One might still be tempted to argue that Logue's pigeons showed at least one "strategic" aspect of self-control, in the sense that they chose a future environment that helped them to wait for the bigger reward (because that environment forced them to wait). However, since the pigeons were trained to be unaware of the differential delays, there was no anticipated temptation and no need to do anything against it. The fact that the pigeons originally learned to choose the bigger of two equally delayed rewards suggests a more parsimonious explanation of the results: They simply maintained their preference for the bigger reward because they did not notice that the delay of the smaller reward gradually decreased during the fading trials. Thus, they showed acquired rigidity rather than self-control.

An adequate operational definition of self-control requires a theory that specifies the underlying mental processes. Until now, our own theoretical work has not yielded much more than a description of what kinds of measurement techniques we need to develop (e.g., techniques that assess emotional preference and commitment independent of observed maintenance behavior). Modern research on self-control will suffer a fate similar to that of classical will psychology unless we find solutions to the measurement problems left unresolved. During the probably long process of searching for adequate techniques we might practice ourselves what we are trying to study in our subjects: waiting (and working) for the bigger reward rather than yielding to the temptation to accept an immediate, inadequate one.

On the origins of selves and self-control

C. Fergus Lowe and Pauline J. Horne
Department of Psychology, University College of North Wales, Bangor, Gwynedd LL57 2DG, United Kingdom

Logue's target article has the important merit of drawing attention to many of the problems associated with models of "self-control" that are based on Herrnstein's matching law or molar maximisation principles. The solution we are offered, however, couched as it is in terms of a unitary evolutionary theory of "self-control" in animals and humans alike, fails to achieve the integration promised in the title.

Logue makes the indisputable point that "self-control," as she defines it, is very often not a direct function of the current physical values of the reinforcers. Invoking the notion of "perceived reinforcement" – a hypothetical and unobservable construct – to improve current models of choice is, however, more contentious. In support of this, Logue notes that according to Lowe (1979; 1983) it is *perceived,* rather than *actual,* contingencies that control human behaviour. This is an unfortunate misinterpretation, likely to lead down a slippery philosophical/conceptual slope to dualism. Reinforcement contingencies affect human behaviour directly, and this is the case also for verbal behaviour about contingencies, which may itself enter into the controlling relations. Moreover, to describe such verbal behaviour as subjects' "perception of contingencies," while making a concomitant attempt to account for animal behaviour in like terms, is to blur, if not obliterate, the very distinction between animal and human performance that Lowe was seeking to emphasise, that is, that only the latter is subject to the influence of verbal rules and descriptions of contingencies of reinforcement (and see Skinner 1974; 1984). Logue's approach raises two central questions. Is it possible for a concept such as "perception" to provide a unitary mechanism accounting for both animal and human self-control, and is evolutionary theory the most appropriate framework for such an account? A great deal of recent and past research on learning would seem to indicate that the answers to both these questions must be unequivocally in the negative.

Human behaviour is distinguished from that of other animals not only with respect to phylogenetic history, but also because so much of it is determined by sociocultural factors, the chief embodiment of which is verbal behaviour (Holzman 1985; Lowe 1983; Luria 1961; 1982; Skinner 1974; 1984; Vygotsky 1962; 1978). Human choice is thus governed by a multiplicity of sociocultural contingencies, rather than being straightforwardly determined by the exigencies of the "natural" environment. Herein lies the difficulty for an overarching evolutionary account of choice, applicable to both animals and humans.

The longstanding work of Mischel and colleagues in this area testifies to the considerable variability in children's choice behaviour. Mischel and Peake (1982), for instance, found that the preschool child, who delays effectively in some contexts, may not do so in other, only slightly differing, situations. On the basis of his extensive experiments on human self-control, Mischel (1984) concedes that "because ideation can readily transform the objective external situation to produce opposite results, the predictability of behavior hangs by a precariously thin thread. . . . What people do depends on how they construe their situation at any given moment . . . " (p. 354). The potential for prediction, rather than mere post hoc description, of human choice is often reduced to the fact that if subjects are instructed to adopt a given strategy and if, in addition, these subjects have a strong history of instruction-following in such situations, then their actual choice behaviour is likely to be correlated with the pre-experimental instruction given. Even Logue's most generalised equation, with three free parameters to accommodate variance in performance, has poor predictive value with human subjects (Logue et al. 1986 and see Table 2). On the basis of her experiments on human choice, she has noted that variability in behaviour is correlated with strategies for responding articulated by the subjects at the end of the experiment. She considers that, as in studies of human performance on other schedules of reinforcement (Lowe 1979; 1983), covert verbal behaviour is a likely determinant of human choice. But the great variety of human verbal behaviour cannot be subsumed, as a subject variable, within the free parameters of mathematical equations.

The failure of mathematical accounts to describe and predict human behaviour has precedents in other studies of human choice. Where sensitivity to frequency (rather than amount and/or delay) of reinforcement has been examined in studies of concurrent VI schedule performance, human subjects have been found to exhibit gross departures from the matching equation, even in its generalised form. In contrast to the predominance of slight undermatching found in animal studies, those human data which can be described by the generalised matching equation show sensitivity to reinforcement ranging from gross overmatching through considerable undermatching, indifference, and even to negative undermatching (Horne 1986; Lowe & Horne 1985; Navarick & Chellsen 1983; Oscar-Berman et al. 1980; Pierce et al. 1981; Schmitt 1974; Takahashi & Iwamoto 1986).

In terms of variance accounted for, some human data are only poorly described by the generalised matching eqution. Indeed, there are reported instances which cannot be described at all by that mathematical relation. Lowe and Horne (1985), for instance, have reported that some subjects responded exclusively to the richer components of each concurrent VI schedule presented – a result without precedent in the animal literature. At the end of the experiment, these subjects justified this pattern of responding by claiming that they thought it necessary in order to maximise their earnings. However, their verbal reports indicated that they had essentially misconstrued the scheduled contingencies and that their chosen pattern of responding in fact resulted in considerable "economic" loss. These experiments provided a great deal of evidence of the pervasive effects of subjects' rules, often very idiosyncratically formulated, on "choice" performance.

In the course of human development, the verbal community arranges that human choices are consistent with prevailing sociocultural practices: Self-control is thus very much a verbal rule-governed phenomenon, and develops as people become more sophisticated rule-constructors and rule-users. Humans devise various means to accomplish their self-control. For instance, they may impose tasks on themselves to occupy the time that has to elapse before the larger reinforcer is available; they may arrange their environment so as to restrain any tendency to impulsivity, thereby ensuring commitment to one reinforcer alternative; or they may instruct themselves to think about non-hedonic properties of the reinforcer to minimise the risk of impulsivity. But self-control is not simply instruction-following or the construction of means to ensure waiting for richer delayed reinforcers; it *may* also involve a detailed consideration of the benefits of choosing one course of action among several, even hypothetical, alternatives.

Any human choice may therefore be a function of (i) other choices the individual has made in the past, (ii) the choices that the individual has seen or heard others make or recommend, whether in real life, literature, or other media, (iii) the choices that might be imagined, inferred, or logically deduced from any combination of the aforementioned or any other information source, and (iv) the consequences that followed previous choice behaviour or might be imagined to follow hypothetical courses of action. From such varied and idiosyncratic origins (many of them far removed from factors which affect the survival of the species!) emerges the "self" that is controlling, and being con-

trolled in what we identify as instances of human self-control (cf. Vygotsky 1978). The attempt to circumscribe the latter within a homogeneous evolutionary theory of choice, common to both animals and humans, may have an appealing simplicity, but it cannot begin to do justice to the complexity of the subject matter.

On the functions relating delay, reinforcer value, and behavior

James E. Mazur and R. J. Herrnstein
Department of Psychology, Harvard University, Cambridge, Mass. 02138

Logue's thoughtful and balanced survey of different theoretical approaches to the problem of self-control omits a few conceptual and empirical distinctions that seem worthy of consideration. Our comments will focus on (1) the distinction between reinforcer value and behavioral manifestations of that value, (2) an equation that appears to provide a better description of the relation between reinforcer delay and value than Logue's Equation 2, and (3) the ability of molar maximization models to deal with the effects of reinforcer delay.

Like others who have addressed the question of self-control from a reinforcement-theory perspective, Logue focuses on the relationship between reinforcement delay and value. Her Figure 1, like Ainslie's comparable graphs (e.g., Ainslie 1975), plots value as a reciprocal function of delay. Her discussion then moves directly to implications for behavior, without any explicit statement or consideration of the relationship between behavior and value. It seems to us that there are two relationships at issue here and that it is a good idea to be quite explicit about both of them. First is the one relating value (V) to delay (D), but second is the one relating behavior (B) to value. In functional form, the two relationships can be written as

$$V = f(D,a,b, \ldots)$$
$$B = g(V,l,m, \ldots)$$

The lower-case letters in parentheses refer to variables other than delay and value which affect value and behavior, respectively, and will receive no further attention here. Among the three upper-case letters, the only directly observable dependent variable here is behavior. We know a fair amount about the nature of its functional relation to value (or its synonym, reinforcement), and that relation is the proper basis for making inferences about the unobservable variable, value.

Specifically, much evidence suggests that behavior is, at least approximately, a hyperbolic function of reinforcement, in accordance with the absolute response rate version of the matching law, as follows:

$$B_1 = \frac{kV_1}{V_1 + V_e} \tag{1}$$

In this form, the parameter k represents the total amount of behavior expressed in units of B_1 and the parameter V_e is total reinforcement (i.e., value) other than that expressed by V_1. In selecting a functional form for the relationship between value and delay, it seems prudent that it be both formally consistent with the matching law, and confirmed by the available evidence. Or, to put it another way, a failure to take this logical connection into account may be a failure to take advantage of the potential for creating a coherent account of behavior.

These considerations evidently did not much influence Logue's formulation. Her Equation 2, stating her power-law expression for the function relating amount and delay of reinforcement to behavior, seems to us to have theoretical and empirical problems. Theoretically, it implies that the behavior ratio is as much influenced by a pair of delays of, say .1 and .01 seconds as it would be by 10 and 100 seconds, an assertion that flies in the face of plausibility. Logue recognizes the issue but does not see how readily it can be resolved by the matching law, once the right functional form for the relationship between value and delay is selected. This brings us to the empirical side of the issue.

The empirical challenge to her Equation 2 is provided by a series of experiments by Mazur (1984; 1986; 1987), who used pigeons as subjects. Mazur found that the following hyperbolic equation offers an accurate description of the relation between reinforcer delay and value:

$$V_i = \frac{A_i}{1 + KD_i} \tag{2}$$

where V_i is the value of a reinforcer delayed D_i seconds, and K is a free parameter that can vary across species, individuals, and situations (just as s_D and s_A can vary in Logue's equation). A_i reflects the amount of reinforcement, but unlike Logue, Mazur assumed only that A_i is monotonically related to physical measures of amount (e.g., milligrams of food). For his purposes, there was no reason to assume that A_i (and therefore V_i) doubles if the quantity of food or any other reinforcer doubles.

Equation 2 was tested by giving pigeons hundreds of choices between two delayed reinforcers, one large and one small. Mazur's procedure was designed to obtain estimates of indifference points – pairs of delay-amount combinations that had equal value. For example, Mazur (1987) found that for a typical pigeon, 2 s of food delivered after a 6-s delay was about equally preferred to 6 s of food delivered after a 17-s delay. By keeping the 2-s and 6-s amounts constant but varying the delays, Mazur could determine, for each increment in the small-reinforcer delay, how much the large-reinforcer delay had to be increased to maintain indifference. For all subjects, plots of large-reinforcer delays as a function of equally preferred small-reinforcer delays yielded linear functions with slopes greater than one and y-intercepts greater than zero. These functions are predicted by our Equation 2, but they are incompatible with other possible relations between delay and value, including an exponential relation ($V_i = A_i \cdot \exp[-KD_i]$) and an inverse relation ($V_i = A_i/KD_i$).

These empirical indifference functions are also incompatible with Logue's Equation 2, which predicts that as the delay for a small reinforcer approaches zero, the delay for the large reinforcer must also approach zero to maintain an indifference point. However, the positive y-intercepts obtained by Mazur (1987) meant that subjects were indifferent between 2 s of food delivered with no delay and 6 s of food delayed a few seconds. One might argue that the delay for the 2 s reinforcer was not really zero because it took the pigeons a fraction of a second to reach the food. However, Mazur, Stellar, and Waraczynski (1987) recently obtained similar results with rats using a reinforcer that was presumably received virtually instantaneously after a response – electrical stimulation of the brain. Even with the instantaneous delivery of a small reinforcer as one option, the rats chose to wait 4 s or more for a larger reinforcer. This result is inconsistent with Logue's Equation 2, and with any other equation that assumes that V_i approaches infinity as D_i approaches zero.

Let us now combine Mazur's findings concerning value as a function of delay (Equation 2) with the matching law in its absolute response rate form (Equation 1):

$$B_1 = \frac{\dfrac{kA_1}{1 + KD_1}}{\dfrac{A_1}{1 + KD_1} + V_e} = \frac{kA_1}{A_1 + V_e + KD_1V_e} \tag{3}$$

This equation differs from Herrnstein's attempt to combine the two underlying relationships (see Herrnstein 1981). Equation 3 is consistent not only with the evidence on delay and matching, but also with all of the effects described in Logue's target article; it would not be appropriate here to re-review the evidence, however.

Our final comment concerns the way Logue and others have attempted to accommodate the effects of delay within the framework of molar maximization theories such as optimal foraging. [See also Houston & Macnamara: "A Framework for the Functional Analysis of Behavior" *BBS* 11(1) 1988.] As Logue correctly states, without modification these theories predict that animals will always choose the larger but more delayed reinforcer in a self-control situation. To deal with overwhelming evidence to the contrary, the theories sometimes include time-windows beyond which delayed reinforcers are simply not counted. In our view, this approach makes little sense. For one thing, many lines of research indicate that reinforcer value declines continuously and gradually with increasing delay, not in the stepwise fashion that a time-window implies. Another way to modify a molar maximization theory would be to incorporate a temporal discounting function that lowers the impact of delayed reinforcers (cf., Rachlin et al. 1981). But whether the temporal discounting is stepwise or gradual, its inclusion in a molar maximization theory seems to be a contradiction of the meaning of the word "molar," in the absence of essentially ad hoc suppositions chosen to vitiate or disguise the contradiction. The main assumption of molar maximization theories is that some resource (e.g., food, energy) will be maximized *in the long run*, presumably because this will enhance the creature's chances of survival. Once a temporal discounting function is added to such a theory, however, the theory no longer predicts that any long-term variable will be maximized (except by coincidence). To us, the dramatic effects of delay offer clear evidence that both human and nonhuman decisions are all too frequently guided by short-term consequences, and they point to one of the major shortcomings of theories postulating long-term maximization.

ACKNOWLEDGMENT
Preparation of this manuscript was supported by Grant MH 38357 from the National Institute of Mental Health.

Evolution and impulsiveness

Jay Moore
Department of Psychology, University of Wisconsin-Milwaukee, Milwaukee, Wis. 53201

Logue has reviewed the human and nonhuman literature on self-control, and has proposed that self-control research be integrated under a conceptual framework that draws heavily on adaptiveness and evolutionary theory. In one sense, the suggestion is surely correct: Organisms living today are the product of, perhaps, one or two hundred million years of evolutionary history. When we use these organisms as subjects in our laboratory, the variables they encounter, such as delay and amount of reinforcer, have presumably been relevant in the history of the species.

Nevertheless, one of the most striking findings in the self-control literature is the apparent maladaptiveness of the behavior. Without a good deal of urging, organisms will reliably choose a smaller, more immediate reward over a larger, delayed reward, even though this pattern of preference results in a lower net intake over the time period in question. Although this behavior might be judged as maladaptive, it suggests that organisms may have been selected over the years on the basis of their sensitivity to immediacy of outcomes. As Section 7 of the target article points out, a sensitivity to the immediacy of an outcome is ordinarily adaptive. It is the contrived situation of the experimental laboratory that makes this sensitivity appear maladaptive.

Although the comparison is not perfect, the maladaptiveness of choosing a smaller, immediate reward over a larger, delayed reward may have a counterpart in the ethological literature: supernormal stimuli. Herring gull chicks peck more at an artificial model of its parent's bill with such exaggerated features as an elongated tip and a red patch near the end, than at a normal model (Tinbergen 1953). In addition, ringed plovers and oyster catchers may choose to incubate supernormal eggs of exaggerated size and color pattern in preference to their own eggs (Tinbergen 1951). None of these findings seems adaptive. If the artificial models with the exaggerated features existed in the world outside the laboratory, species that manifested these tendencies would surely not have survived. The control exercised by delay corresponds to the control exercised by the supernormal stimuli, and adaptiveness is a post hoc judgment of the behavior, rather than a description of the environmental features that evoke it.

Thus, some caution is to be urged if self-control and impulsiveness are conceptualized as phylogenically determined, organocentric "faculties" that are simply revealed in a choice between smaller, immediate reinforcers and larger, delayed reinforcers. What has a phylogenic basis is the sensitivity to particular kinds of environmental stimulation. Of course, ontogenic considerations may be superimposed onto the phylogenic considerations. That is presumably why the pattern of responding called "self-control" may be shaped through a fading procedure (Mazur & Logue 1978).

In any case, behavior exists with respect to the environment. Operant responding is a special case of such behavior, the basis of which is presumably phylogenic. Organisms that inherit a sensitivity to the consequences of their actions are more likely to survive. Choice behavior is a special case of operant responding, and self-control/impulsivity is a special case of choice behavior, under the influence of both ontogenic and phylogenic variables, depending on the species and the life experience of the subjects. It is not clear that phrasing the issue in terms of "perceived reinforcement," in variations on the classic S-O-R theme, will prove to be the most effective approach.

Spurious self-control: Potential outcome in research with humans

Douglas J. Navarick
Department of Psychology, California State University, Fullerton, Calif. 92634

Logue adopts the standard behavioral definition of self-control – choice of a larger, more delayed reinforcer over a smaller, less delayed one. Implicit in this definition is the premise that immediacy of reinforcement is, in fact, a factor in choice; for example, if the reinforcers were equal in magnitude, the less delayed one would be preferred. It is instructive to consider the case in which the premise of self-control research is not met and the subject is indifferent between immediate and delayed reinforcement. If the delayed reinforcer were subsequently made larger than the immediate reinforcer, and the subject preferred the former alternative, Logue's criterion for self-control would be met. The observed effect would be spurious, however, because no conflicting response tendency requiring control or restraint would exist.

In nonhuman subjects, a preference for reinforcement immediacy is a safe assumption, but in normal human adults it is not. Whether or not reinforcement immediacy affects choice appears to depend on the type of reinforcer used. In the studies of mine cited in the target article, several reinforcers were used – noise

termination, video game playing, and the viewing of slides of entertainment figures. In each case, subjects preferred immediate reinforcement to delayed reinforcement with amount of reinforcement and overall reinforcement frequency held constant, thereby making a test of self-control meaningful. However, in another study (Navarick 1985), subjects did not prefer immediate to delayed reinforcement, even though they preferred a large to a small amount of reinforcement. In this case I used a novel type of reinforcer that derived its value from the instructions rather than from any physical characteristic of the stimulus. Specifically, the reinforcer was a set of indicator lights on the response console that the subject was asked to react to with a "pleasant feeling." There was no expectation that subjects would actually experience pleasure in response to the lights. Rather, it was thought that the instructions would impart reinforcing value to the stimulus by establishing an experimental demand characteristic which specified that the lights should be valued. (The results suggest that subjects were indeed responding to a demand characteristic, that is, in a manner likely to produce approval, or avoid disapproval, by the experimenter. The instructions implied that some reinforcement was better than none, from which subjects probably inferred that more was better than less. However, there was nothing in the instructions to suggest that turning the lights on immediately was better than turning them on after a delay, hence the finding of indifference to reinforcement immediacy.) Since reinforcement immediacy was not a factor in choice, it was pointless to proceed with a test of self-control. A preliminary assessment of preference for immediacy thus prevented an erroneous characterization of performance in the sort of paradigm advocated by Logue.

The experiment by Logue et al. (1986) described (sect. 5.3.1., para. 3) and illustrated by Figures 7 and 8 is offered by Logue as an example of human self-control in an operant conditioning paradigm. However, the effect may well be an instance of spurious self-control, an artifact of the type of reinforcer used – points exchangeable for money. Intuitively, it seems likely that points have functional properties similar to those of the lights used in my experiment. That is, subjects would probably have preferred a large to a small number of points if the delays had been equal, but would have shown no preference for receiving points now rather than later if the numbers of points had been equal (e.g., 3 points now followed by a delay of 10 sec vs. a delay of 10 sec followed by 3 points). Such a dissociation between the effects of amount and delay also raises questions about the appropriateness of interpreting results in terms of animal models of choice (e.g., the "generalized matching law"). These models presuppose an effect of immediacy, and if none exists, a reasonable inference is that the processes controlling choice differ fundamentally from those found in nonhuman subjects.

In summary, I would suggest that researchers interested in studying human self-control or impulsiveness in an operant conditioning framework avoid the use of points as reinforcers. Not only do they fail to produce impulsiveness (as demonstrated by Fig. 8), but they probably also fail to produce genuine self-control.

On observing the unobservable

Ovide F. Pomerleau and Cynthia S. Pomerleau

Behavioral Medicine Program, Department of Psychiatry, University of Michigan School of Medicine, Ann Arbor, Mich. 48105

The self-control paradigm shows much promise for furthering the theoretical understanding of complex behavior, and it has practical and societal implications as well. For example, from a public health perspective, prevention of the leading causes of morbidity and mortality involves the modification of self-management disorders such as smoking, overeating, problem drinking, and exercise (Pomerleau et al. 1975). Similarly, many societal issues may be productively analyzed as problems of choice and delay of gratification; for example, resource management can be conceptualized as involving conflicts between expediency in the use of natural resources and deferring to a time when there might be greater need or better understanding of complex ecological issues.

The value of Logue's attempt to integrate insights from seemingly disparate lines of research on self-control – social learning theory, operant conditioning, economics, and evolutionary theory – is manifold: It makes insights from one discipline accessible to other disciplines; it helps to break down the artificial fragmentation of the object of study – the organism – that inevitably results from the existence of many different fields, each with its own assumptions, technology, and terminology; and it offers reassurance that we are studying something real, that our theories and the observations we base them on are not simply artifacts of methodology. However, the danger of this attempt is that the whole will only be as strong as its weakest part, and that weaknesses in one approach will undermine strengths in another. All models are not necessarily created equal.

Logue argues cogently that a cardinal virtue of her formulation of self control – a choice of a larger, more delayed reinforcer over a smaller, less delayed reinforcer – is that it can serve as an operational definition that permits systematic examination of the phenomenon in both laboratory and field settings. And indeed, she presents an impressive body of evidence to support this contention. Her discussion of methods for specifying individual differences, for example, is very provocative in suggesting ways of quantifying them so that they can be studied directly, rather than being lumped in with "error." It is therefore ironic that the logic of her argument leads her to fall back on the idea of "perceived reinforcement" – a "hypothetical, unobservable construct that simply represents the observable influence of various factors on the relationship between behavior and reinforcers." Such a construct does not easily lend itself to operationalization.

But is it really necessary to posit a cognitive construct that is something other than the sum of its parts? For example, Logue states that "researchers studying human operant conditioning have been using this concept to help describe some of the lack of correspondence between behavior and the current environment that seems to be so prevalent with human subjects." These differences in performance, however, can be seen more parsimoniously as variability in the capacity to develop or learn self-control strategies – that is, techniques useful for maintaining behaviors that increase the probability of obtaining larger delayed reinforcers. Thus, what allows organisms to ignore various "temptations" is, operationally, the ability to acquire complex behavioral repertoires. Such a line of reasoning devolves naturally to an emphasis on behaviors whose control can be manipulated, making functional analyses possible.

Moreover, rather than proving the existence of some sort of cognitive transformer that cannot be directly observed, the seeming "lack of an isomorphism between reinforcement and behavior" may simply reflect a shortcoming of black box models in failing to consider biological mechanisms (Crick 1979). Thus, complex cognitive explanations of drug addiction may be radically simplified by taking into account the psychopharmacological effects of substances with abuse potential. Logue herself alludes to the possibility that "hot thoughts" may elicit conditioned insulin release but fails to acknowledge that this phenomenon may actually obviate the necessity for metaphorical constructs. The fact that behavioral, physiological, and biochemical responses can serve as directly observable concomitants of craving (Pomerleau et al. 1983) brings "perceived reinforcement" back into the realm of physical science.

Self-control and the panda's thumb

Eliot Shimoff and A. Charles Catania
Department of Psychology, University of Maryland Baltimore County, Catonsville, Md. 21228

Logue's analysis of self-control begins with definitions and ends with an evolutionary account. Such a progression is attractive, because an evolutionary perspective is appealing to most researchers in the biological tradition. It is also parsimoniously liberal, in revealing the common roots of apparently conflicting theoretical positions. Unfortunately, the evolutionary perspective as presented in the target article fails to make some important distinctions.

The panda's thumb and the octupus's eye are classic examples of how very different evolutionary histories can produce superficially similar organs; the panda's thumb and the octopus's eye are respectively analogous but not homologous to a human's thumb and eye. The same distinctions must be made among expressions of self-control in different species. It is plausible that the varied expressions of self-control in nonhuman vertebrate species share common phylogenic evolutionary histories and can be appropriately considered homologous; they are all instances of the same kind of self-control. But it seems unlikely that self-control in verbal humans is a product of that same evolutionary history; it is part of a very different behavioral class.

Human self-control includes a ubiquitous verbal component, and thus is at best only analogous to pigeon self-control; it is clearly not homologous to it. The target article presents examples of experiments in which the data of verbal humans differed qualitatively and quantitatively from those of nonverbal humans or of nonhumans, for example, the changes in self-control with age that occur when "children began to express knowledge of behaviors associated with delaying" (sect. 5.1.1, para. 1), and the maximization data that disagree with matching equations and are said to reveal a "maximization strategy . . . based on [the subjects'] verbal abilities and histories" (sect. 5.3.1., para. 3).

In fact, some of these differences might not even justify an argument for analogies, much less homologies. But even if the analogies were closer, it would be begging the question to assume that human self-control is based on acquired verbal strategies that allow the individual to modify time horizons or to change the relative weightings of alternatives. We agree that "species differences in choice behavior, including any effects of human verbal behavior, can be examined within a self-control paradigm" (sect. 1, para. 7), but what we miss are suggestions of how such an analysis might proceed. How are self-verbalizations established? What are their functions? What is the relation between expressed preferences and actual choices? Until such questions are answered, the status of verbal self-control in the context of the present evolutionary account remains moot.

Self-control in verbal humans has two evolutionary sources. First, the verbal behavior itself must be the response of our species to evolutionary pressures that operated at the phylogenic level. Second, self-control in verbal humans must also reflect a different level of selection: the ontogenic selection of some responses over others. The proximate causation for the self-control that might have been involved in Logue's preparation of the target article or in our preparation of this commentary must have been ontogenic rather than phylogenic selection.

The difference between ontogenic and phylogenic selection is important for two reasons. First, we must distinguish between topographically similar responses with different behavioral histories. Such a distinction is the hallmark of a functional analysis. The behaviorists' specification of operants as response classes sharing common reinforcement histories, like the evolutionists' distinction between homologous and analogous parts, implicitly distinguishes topographies from origins and forms from functions.

Second, the distinction between phylogenic and ontogenic histories directs subsequent research. If, as we suspect, human self-control is a product of ontogenic histories that involve verbal behavior, accounts of self-control that do not provide a separate analysis of the role of verbal behavior are necessarily incomplete and inadequate.

Misinterpreting Mischel

Edmund J. S. Sonuga-Barke
Department of Child and Adolescent Psychiatry, Institute of Psychiatry, University of London, London SE5 8AF, England

Logue's attempted synthesis of experimental work on "self-control" is dogged by a tension between two different ways of thinking about self-control. On the one hand there are the quantitative theories associated with contemporary behavior analysis – molar maximization theory and the matching law; on the other hand there is Mischel's (1973) cognitive social learning theory of personality development. In the end Logue's brand of eclecticism fails because these tensions are not satisfactorily resolved within her evolutionary framework. This tension exists because Logue attempts to integrate formal aspects of Mischel's theory (for instance, its use of the notions of hot and cold thoughts in explaining "self-control" and "impulsivity") without first unloading and attempting to understand its associated philosophical baggage.

The significance of Mischel's developmental perspective. Mischel's theory, although used to explain behavioral phenomena, is essentially a theory of development. Consequently, the way a child's behavior relates to the environment is regarded as an expression of his developmental status (Mischel 1981c). Logue seems to have missed the significance of this, concentrating instead on a nondevelopmental interpretation, in which a subject's behavior "is represented as a function of the perceived environment."

As a consequence, Logue fails to come to terms with the different roles played by the notion of "self-control" in Mischel's theory and in behavior analysis generally. For whereas in contemporary behavior analysis "self-control" is just a convenient way to describe a type of response to a complex intertemporal choice situation, in Mischel's theory it plays a central role in defining the conception of rational action toward which the "normal" child develops (Mischel 1981c). For Mischel, the ability to "delay gratification" has value in and of itself, because it is one component of a "mature personality orientation" (Furnham & Lewis 1986, p. 83). Hence, although it is acceptable for a behavior analyst to suggest that "impulsivity" could exist because it is adaptive (sect. 7, para. 8), for Mischel such a suggestion would contradict the view of rationality on which his developmental theory is constructed.

Comparing Mischel's paradigm with the operant, "self-control" paradigm. It is important to recognise that this developmental perspective has in the past constrained the types of interpretation given to childrens' performance in Mischel's "delay of gratification" experiments. It has done this because it implies that there is a "correct" way for subjects to behave (i.e., they should show self-control). This leads Mischel (and also Logue in the present target article) to ignore some possible interpretations. For example, perhaps the child who chooses the small reward (i.e., acts impulsively) is maximizing a source of reward outside the experiment; according to this interpretation, the research goal must be to identify that source.

This type of explanation focuses on the role played by the postreward delay period in operant "self-control" and Mischel's

"delay of gratification" studies. In operant studies of self-control, postreward delay follows the delivery of the immediate small reward in order to compensate for the effects of the longer delay to the large reward on the relative rate of reward access. (With no postreward delay the small immediate reward is associated with both the higher rate of reward access and the higher rate of reward.)

In the "delay of gratification" paradigm no such postreward delay period is included. Logue, overeager to stress the similarities between the two paradigms, argues that adding such a period of time would serve no purpose in the one-choice procedure used in Mischel's post-1970's paradigm, and that the choices made in the two paradigms are essentially equivalent. This is incorrect. Whereas it is true that in a one-choice situation the effect of prereward delay is not confounded with rate of access to rewards available within the experiment, it is, however, confounded with access to rewards available outside the experiment; it affects the economic context in which the experiment operates (cf. Sonuga-Barke et al., in press a).

Reinterpreting Mischel's data. Unless one assumes that each choice made in the lab is isolated from its real-world economic context, it must be conceded that the small experimental reward, *added to the opportunity to leave the experiment early* (and so gain extra-experimental rewards), might be of more overall value than the large experimental reward. This means that the "delay of gratification" choice situation does not share the same quantitative characteristics as that used in operant "self-control" studies, and that results from the Mischel studies need to be reinterpreted before they can be integrated into this general theory.

For instance, according to the present analysis there are clearly two possible explanations of choosing the small reward. It may be that the child is "impulsive" (in Mischel's sense), so that although he prefers the large delayed reward he is unable to wait for it. But it may be that the child is sensitive to the rate of access to extraexperimental rewards and prefers the smaller reward.

This ambiguity leads to the counterintuitive position that what both Mischel and Logue call "impulsivity" – the choice of the small, immediate reward – should in some situations be regarded as having a higher developmental status than "self-control," the choice of the large reward. Sometimes choosing a small, immediate reward may show precisely that sensitivity to the economic context that is necessary for effective practical action (Sonuga-Barke et al., in press b).

Evolution, behavior systems, and "self-control": The fit between organism and test environment

William Timberlake

Department of Psychology, Indiana University, Bloomington, Ind. 47405

Logue has provided a service in simultaneously considering three divergent approaches to the study of self-control (defined as the choice of the larger but more delayed of two alternative rewards). The cognitive approach of Mischel (1981a) focuses on the effects of "hot" versus "cool" thoughts on choice. The matching law approach focuses on the relative drop-off in the value of an alternative as a function of delay and amount of reward. The maximization approach focuses on the overall density of reward, adding to the matching law variables the delay to the next choice and the notion of time horizon. Logue appropriately emphasizes the similarities among these approaches in terms of the factors presumed to affect choice and in their use of "perceptual" concepts to deal with the fact that self-control may either occur or not. All of this is straightforward and clearly described.

However, Logue has a more complex purpose in mind, namely, the contention that the mixture of self-control and impulsiveness that occurs in experimental situations can be understood in evolutionary terms. Impulsiveness will be favored for those species (and/or in those situations) in which speed of feeding is necessary, or the environment is sufficiently changeable to make impulsiveness of a higher expected value. In contrast, self-control will be adaptive when immediate food intake is unnecessary. Given this analysis, Logue argues that different models may be more appropriate for different circumstances.

I am in basic agreement with Logue's conclusion that self-control/impulsiveness, like any other set of alternative behaviors, must occur as a function of the fit of the phylogenetically and ontogenetically derived structures and processes of an organism with the nature of the environment. However, Logue's approach is not yet sufficiently spelled out to produce strong predictions. The fit between theory and data is not made firm enough using the present data to deal accurately with future data.

Some cases in which Logue argued for specific mechanisms seemed unlikely. For example, I don't believe that the failure of pigeons to maximize in typical self-control situations is due to a time-horizon of less than, say, six seconds. If pigeons cannot integrate information over a longer time period than this, how do they choose appropriately among patches of different density in the wild? In the laboratory, how do they match relative responses to relative reinforcers, especially on concurrent chain schedules, which require evaluation over much longer time periods?

In the remainder of this commentary I will briefly sketch a more concrete evolutionary approach that may account for a good deal of the data in the self-control paradigm. Timberlake (1983; 1986) and Timberlake and Lucas (1985; in press) have maintained that learning in animals occurs within a multilevel functional structure called a "behavior system" by the ethologists (e.g., Tinbergen 1951). A behavior system comprises motivational processes, stimulus filtering, and response organization evolved to increase the probability of obtaining a particular commodity, such as food.

Two aspects of a behavior system are important here. First, the lowest level of a behavior system consists of particular perceptual-motor modules that sensitize the animal to entrainment and control of particular motor topographies by particular stimuli. Second, the ease of activation of these perceptual-motor modules is controlled, to an extent, by two partially overlapping motivational states or modes, general and focal search. General search refers to exploratory and systematic search behaviors related to increasing the likelihood of locating and capturing food. Focal search refers to behaviors related to the actual capture and handling of food. The mode of behavior of an animal is determined primarily by the proximity of reward (in terms of time, effort, and physical distance) and, to a lesser extent, on specific cues that may differentially control a particular module.

From a behavior-system standpoint, impulsiveness should arise when the animal is in focal search mode based on proximity to reward. The focal search mode overrides issues of patch or subpatch selection in favor of responding to the cue that best controls focal search-related behavior. The lighted keys in a Skinner box for pigeons have obviously been designed to control pecking, at least some of which (the open-beak peck) is strongly related to focal search. Since both keys are the same distance from the hopper and are lit at the same time, we must assume that the mode-related value of these cues is determined by the relative delay and amount of food, and that the delay of food counts more than its amount. Given these assumptions, with

relatively short delay to the initial reward (say less than 6 seconds) pigeons should be in focal search mode and should be most likely to peck the keylight associated with the faster reward.

In contrast, if animals are at a greater distance from food, and therefore in a more general search mode, they should respond to the cue that best entrains more general search behaviors. Thus, the choice between two lighted cues is more likely to reflect which subpatch or patch will be the more productive. In general, any variable that increases the perceived proximity to food will promote focal search behavior and will produce less self-control. The impulsiveness effect will be increased to the extent that the experimenter measures choice by focal-search behaviors directed to focal-search cues, and it will be decreased to the extent that the experimenter measures choice by more general search behaviors directed to or controlled by cues more appropriate to general search.

From these arguments the current self-control paradigms for pigeons appear designed to produce impulsiveness because they predict a very proximate reward with a punctate cue suitable for controlling focal search. Impulsiveness should be decreased by increasing the delay to the first reward or by requiring pigeons to locomote to particular locations in response to diffuse cues to obtain access to food. Perhaps the best self-control in this paradigm could be obtained by requiring locomotion with respect to a diffuse cue to obtain the proximate reward and pecking of a punctate cue to obtain the more distant reward.

Because the focal search argument predicts that impulsiveness should appear only when the animal is quite close to a reward, there is an apparent conflict with Logue's argument that the Collier (1982) phenomenon of increased meal length and decreased meal frequency with increased requirement for initiating a meal is a self-control phenomenon. In Logue's interpretation, the increased size/decreased frequency in meals represents a shift between a choice of smaller, less-delayed rewards to a choice of larger, more-delayed rewards. In my opinion, Collier's is a different phenomenon. In the self-control paradigm, the self-control choice represents a disruption of the search, capture, and handling sequence. In Collier's paradigm this sequence is not interrupted – it is simply delayed because of the large initial search costs involved. The accompanying increase in meal size appears related to the same variable that finally overcomes the initial search cost, namely, an increase in feeding motivation.

It follows from a behavior system approach that any procedure that de-emphasizes the relative proximity of the nearest reward or directly decreases the strength of the focal search mode by physiological manipulations will increase self-control. Any procedure that emphasizes proximity of reward, or operates to increase the strength of the focal search mode, should decrease self-control. At an intuitive level, this appears to relate well to how all organisms make decisions among alternatives. We have indicated some of the data for laboratory animals above. In the case of humans, impulsiveness is controlled by, for example, thinking of other things, being rational, taking the long view, holding a distant goal fixed in mind, relaxing, or taking tranquilizers – all behaviors apparently designed to avoid a focal search mode. Impulsiveness can be increased by focusing on immediately obtainable stimuli, handling, thinking of accessible goals, and dwelling on immediate sensory consequences, all behaviors supporting a focal search mode.

ACKNOWLEDGMENTS

Preparation of this commentary was supported by NSF Grant BNS 84-11513 and PHS Grant MH 37892. I thank Mike Mondloch for encouraging me to think about choice and Ben Williams for confronting me with the self-control data.

Not all models are on the same level: Empirical law and hypothesis

Norio Yamamura

Department of Natural Science, Saga Medical School, Nabeshima, Saga 840-01, Japan

Logue's target article aims to integrate theoretical methods in two different fields, experimental psychology and behavioral ecology, with special reference to self-control and impulsiveness. I appreciate her project in view of the fact that various studies in the two fields have been based on considerably different systems of philosophy and methodology even when similar problems were treated, often rendering comparisons superficial. Logue's effort, however, seems to be a somewhat immature step toward such an integration. For example, the scheme in Figure 1 is quite insufficient as a paradigm in which to discuss self-control problems. It represents only the time schedule on which subjects behave. In the pigeon experiments, rewards for pigeons are proportional to the time of reinforcer access: Herrnstein's original and modified matching laws can be described in terms of that time and the reinforcer delay alone. In Mischel's social learning law, rewards are reflected in the quality of presents given to children. In the classical foraging theory, energy values of prey signify rewards. Although Logue discusses rewards as a "size" in her subsequent context, I think the paradigm should include an explicit reference to rewards at the beginning so as to demonstrate the total theoretical framework.

Logue arranges the three models above on the same level and describes various analogies for her intended integration of terminology, causal analysis, and theoretical analysis. Particularly in the theoretical analysis section, "evolutionary theory" is stressed as a key agent for the integration. In my assessment, the former two models, called "local delay models," are simply empirical laws deduced from experimental data, and the last, called the "molar maximization model," is a theory that includes a hypothesis on the principles underlying how animals behave. It is thus unreasonable for the three models to be discussed on the same level. It is not until the first two models have been expressed in terms of verifiable hypotheses that a real integration of the self-control problems is achieved. As they stand, the models do not have the same theoretical structure.

In the optimal foraging theory, animals are assumed to behave so as to maximize the average intake rate of energy (Pyke et al. 1977) or to minimize the probability of starvation (Houston & McNamara 1985). The maximized or minimized quantity is clearly defined as a mathematical function, and the deduced results are checked against experimental or observational data. Similar maximization methods have brought about recent progress in the analysis of various animal behaviors, including mating behaviors and sociality (Krebs & Davies 1987). Thus one should find some concrete quantitative functions whose maximization (or minimization) leads to Mischel's social learning law or Herrnstein's matching law. It is insufficient to discuss those laws only verbally in relation to survival values for subjects, as Logue does. In addition, maximized functions are not necessarily of survival value because humans and other cognitive animals have great aptitudes for learning. Through education, they might behave so as to reduce their own chances of survival. In other words, maximized functions may have a learning background as well as a genetic background.

Although I am unable to provide any concrete function at the moment, I will adduce some factors to be considered for constructing a maximized function that might lead to Herrnstein's original or modified matching law. If pigeons in the experimental set understood patterns of food supply perfectly and at-

tempted to maximize the rate of energy intake, they would have to become persistent on one choice, right or left, whichever gives the higher rate. The matching laws show that this is not the case, that is, pigeons show access patterns somewhat randomly alternating between the two choices with certain probabilities. I think that severe starvation is irrelevant because the prereinforcer delay is only several seconds. Thus, pigeons are expected to attempt to maximize the energy intake rate. But the pattern of food supply is very unusual compared with one in natural environments.

If pigeons are feeding on grains or seeds dispersed over an open area, persistence in a limited range becomes inefficient because of food depletion; the optimal foraging is alternating feeding sites after a certain time interval. Neither is it conceivable that positive correlation is found between "delay time" and "size" over different sites in natural environments. In case of no correlation, the average rate of energy intake is proportional to the frequency of feeding bouts. Pigeons may respond partially to such a natural food supply in their imaginary world, driven by instinct based on their evolutionary history. This explanation is compatible with frequent alternations between the choices and a stronger tendency toward impulsiveness in the experiments.

Another point that Logue fails to refer to is a game-theoretic feature of the foraging behavior. When more than two subjects forage in the same area, the pay-off of any strategy adopted by any given subject should depend on the number of competitors and on what strategies the other subjects adopt. For example, a theoretical analysis shows that when food is patchily distributed the optimal residence time in a patch is an increasing function of the number of competitors (Yamamura & Tsuji 1987). Although the experiments leading to the matching laws were always conducted with one pigeon on one occasion, the pigeons might in fact behave so as to maximize the food intake rate under competitive conditions. The pigeon is a group-living animal.

In summary, I stress again that the integration of the self-control problems should be attempted in such a way that theories assume the same structure as the maximization method and that the natural environments of animals used in experiments must be considered thoroughly when maximized functions are formulated.

Evolution is not rational banking

Michael D. Zeiler

Department of Psychology, Emory University, Atlanta, Ga. 30322

An animal that would forgo food now in the hope of getting a slightly larger quantity in the future would be the type of gambler welcome in Las Vegas. What are the odds that an animal can judge and remember the amounts of food in separate patches; that the differences between patches are perfectly reliable; that the second patch will not be depleted while the animal eats in the first; and that lingering in one area would have no adverse effects? Such circumstances are so unlikely to occur simultaneously that they do not justify the added risk. In addition, the amount of food can be misjudged, patches vary, eating affects the food supply elsewhere only under certain conditions, and dawdling increases the chances of being a meal yourself while shortening the time available for other activities. An extraordinary set of environmental conditions would have had to coincide fortuitously with suitable genetic variations for self-control to evolve. The improbability of such a scenario explains why self-control is rare both in nature and the laboratory.

Absence of self-control seems maladaptive only to us as all-knowing creators of contingencies. Certainty is for programmers, not real-world performers, which is why we say "a bird in hand is worth two in the bush," "the grass is always greener on the other side of the fence" or "he who hesitates is lost." Self-control is rational and impulsiveness is irrational for purchasers of resources out to maximize value; but economics is not evolution.

Economics and biology lead to different conceptions of maximization and optimality, precisely because profit-making is not always the same as survival. Economic maximization is the rational solution that maximizes differences between benefits and costs. Biological optimality derives from natural selection, where fitness, not profit, is the sole criterion for success. Neither fitness nor sheer survival involves just one aspect of behavior: A partial list of essentials includes reproduction, avoiding predation, care for young, temperature regulation, and finding food. At any time, the best solution for handling any one demand must take into account needs to deal with the others, and this global optimum rarely corresponds with simple maximization.

Optimality theorists derive maximization solutions while recognizing that the behavior can only correspond to predictions that consider competing demands. To the extent that experimental conditions minimize natural constraints such as a lack of interference by predation avoidance or obviation of the need to search for food, the results might more closely approximate maximization. How particular environments influence the complex of constraints is an important question that has not been carefully analyzed as yet. This issue comprises a set of questions that require empirical answers. Whatever these answers may be, the point is that maximization theory is quantified economic rationality, but optimality is a heuristic for analyzing natural selection.

In a biological perspective behavior is a means by which an animal is maintained in its environment. Behavior should not be viewed in a vacuum but as part of the overall strategy evolved for survival and reproductive success. With this in mind, it seems likely that for many species foraging behavior is not likely to have maximum priority in determining the allocation of behavioral resources, except perhaps when other demands are negligible. Pigeons, humans, and other species can go for relatively long periods of time with little or no food, so obviously they have evolved to be less than perfect foragers. Unless many generations have experienced shortage and competition, strong pressure to hone feeding skills to their utmost while deferring meeting other demands is missing. Highly efficient foraging is more likely for hummingbirds, whose metabolism makes it dangerous to miss a meal, than it is for a tough bird like the pigeon. Except for the few animals who are not targets for others, pressure is stronger for the avoidance of predators. The least adept get eaten, so only the best at avoiding predation survive and reproduce. Selection should have generated anti-predator behavior as good as the range of variation allows.

Neither matching nor social learning theory was deduced from evolutionary theory, and molar maximization follows from it only equivocally. Integrating these three essentially unrelated models by means of evolutionary hypotheses is an exercise in eclecticism that continues in the same vein when matching is proposed as the mechanism of optimization. None of the many experiments on matching has shown it to be what the subject is actually using. As far as simple cognitive processes are concerned, matching ratios of responses or time to ratios of consequences seems to entail a decision rule more complex than one based on momentary maximizing principles. Even in nature, which is concerned with outcomes and not how they are achieved, matching seems to be an unnecessarily indirect and complicated way to arrive at optimization.

The basic self-control testing procedure involves choices between alternative small food sources that differ in degree of tininess and are separated by short time intervals. The situation seems only remotely analogous to foraging problems commonly

confronted in nature. However, animals do pass without eating through a patch of food that they would eat in times of shortage on their way to an area containing a preferred diet. For example, monkeys will travel through and past grass on their way to fruit. In this form of self-control, they forgo an immediate meal for a better one in the future. An experiment which provided immediate access to inferior food or delayed access to higher quality forage should show self-control, unless the animals did not discriminate between the food types.

Discrimination ability is always important in such experiments. Can pigeons distinguish between small quantities of food when access to each is separated in time? Self-control only becomes an issue if the meals really seem different. Discriminative properties can also explain why self-control is facilitated by highlighting the distinctiveness of the two sources in the delay period and by teaching the animal to ignore the immediate alternative.

Author's Response

Working toward the big reinforcer: Integration

A. W. Logue

Department of Psychology, State University of New York at Stony Brook, Stony Brook, N.Y. 11794-2500

Among the commentators are investigators familiar with each of the three research traditions discussed in the target article: Mischel's social learning theory, Herrnstein's matching law, and molar maximization. Through their informed commentaries, all have contributed to the enterprise of describing and predicting self-control. The diversity of views represented by these commentaries makes constructing any kind of unified response a distinct challenge. However, given the target article's stated goal of integrating across areas, this challenge has the potential of yielding significant rewards.

This response is organized along the same lines as the target article. First, it discusses the target article's definition of self-control and the extent to which this definition, as used in the laboratory, is relevant to problems the subjects face outside the laboratory. Next, the response considers specific questions raised by the commentators about each of the three research traditions. This is followed by a discussion of the concept of perceived reinforcement and its relation to the controversy between behavioral and cognitive psychologists. Various explanations of self-control and impulsiveness suggested by the commentaries are then considered. Finally, the response evaluates the negative and positive comments about the evolutionary framework proposed in the target article and the implications of these comments for the continuity of behavioral principles across species. [See also Macphail: "The Comparative Psychology of Intelligence" *BBS* 10(4) 1987.]

Self-control inside and outside the laboratory. Most of the commentaries include some discussion of the definition of self-control given in the target article. In particular, they discuss the extent to which that definition, as it has been used in the laboratory, applies to choices outside the laboratory as well. Before detailing some of these comments, it should again be emphasized that the target article's definition was chosen in order to identify a clearly defined and delimited research area, one for which there is extensive empirical evidence. To have tried to cover all research considered by any researcher to be related to self-control, even if this were possible within the space allotted, would have greatly complicated the target article's stated goal of integration across areas. Nevertheless, the alternative interpretations of self-control raised by the commentaries can help to place the material covered by the target article within a context, and can help to suggest ideas for further experiments.

For example, several commentators (**Green & Fisher, Hinson,** and **Zeiler**) feel that the illustrations of self-control given in the target article might have concentrated more on choices in which the two alternatives consisted of qualitatively different reinforcers. The issue of qualitatively different reinforcers was raised in Section 3.2. However, as these commentators note, the article does indeed focus on choices between quantitatively, not qualitatively, different reinforcers. This focus reflects the weight of the evidence that has been collected. Laboratory researchers have tended to focus on choices between quantitatively different reinforcers because in this situation there is only one parameter (quantity) that varies between the reinforcers and therefore the data are much easier to understand. As stated in the target article, the molar maximization researchers appear to be at an advantage here because they assume that all choices can be reduced to options involving different amounts of a single dimension, net energy gain (or loss), and their models therefore treat choices between any pair of alternatives as being quantitatively different, and thus relatively simple to model.

There is no question that many real-world alternatives within a self-control paradigm involve choices between qualitatively different reinforcers. **Zeiler** gives an example of monkeys' passing up the consumption of grass on their way to find and consume fruit. These sorts of choices should accordingly be studied in the laboratory; yet this research has had to await a clear understanding of choices between quantitatively different reinforcers. Now that many of the basic factors responsible for increasing and decreasing self-control (see Figure 9) are understood, such investigations can begin. For example, just as Zeiler proposes in his commentary, in our laboratory (King & Logue, submitted) we are giving pigeons choices between access to a less-preferred grain that they can have sooner and a more-preferred grain that they can have later. As Zeiler predicts, pigeons are more likely to show self-control in this situation than in the traditional paradigm in which the two alternatives differ in the number of seconds of grain access rather than in the type of grain obtained during access.

Yamamura also expresses concern about the focus in the target article on quantitatively different reinforcers, stating that this is not representative of Mischel's delay of gratification paradigm. However, although many of Mischel's and his colleagues' experiments have provided children with choices between qualitatively different

reinforcers (e.g., pretzels versus marshmallows), many experiments have not. For example, Mischel and Baker (1975) presented children with choices between one and two marshmallows, or between one and two pretzels.

Various commentators feel that the definition of self-control given in the target article – choice of a larger, more delayed reinforcer over a smaller, less delayed reinforcer – is too narrow. For example, **Green & Fisher** and **Kuhl** state that the behaviors during the delay periods should be given more attention. In particular, Kuhl feels that self-control is the *maintenance* of the choice of the larger reinforcer throughout the delay period, and that unless the organism is able to change its choice during the entire delay to the larger reinforcer, self-control has not been shown. Kuhl further states that it is this type of choice and this type only that constitutes Mischel's delay of gratification paradigm. However, although the majority of the experiments done by Mischel and his colleagues since 1970 have involved the waiting paradigm described in Section 3.1.1, early experiments used a choice paradigm in which subjects could not change their choices once they had been made (also described in Section 3.1.1). In addition, recent research concerning delay of gratification has shown that similar results can be obtained with both the waiting and choice paradigms (Schwarz et al. 1983). Further, as Kuhl realizes, operant conditioning experiments with pigeons have been conducted both with choice and waiting paradigms. Finally, the definition of self-control given in the target article does not preclude the type of choice with which **Kuhl** is concerned because it does not specify the particular time period over which it applies. This time period could be a single instant or a series of instants.

Other commentators state that for the approach of the target article to apply to a large number of real-world choices, more attention should be paid to a greater variety of temporal schedules of reinforcement (**Hinson**), and to choices between a small reinforcer now and avoiding a large punisher later (**Imada & Imada**). This is absolutely correct. The target article did not include these types of choices because they do not represent the majority of the literature. Until now the self-control literature has mostly been concerned with choices between two positive reinforcers (e.g., Logue et al. 1984), two negative reinforcers (e.g., Navarick 1982), or two punishers (e.g., Deluty et al. 1983); and when reinforcer frequency has been programmed, it has usually been done in such a way as to hold relative reinforcer frequency constant. The future should see the expansion of self-control paradigms to include the types of situations discussed by Hinson and by Imada & Imada.

Several commentators (**Houston & McNamara, Moore, Timberlake, Yamamura**) express concern that the self-control paradigm as investigated in the operant conditioning laboratory is not really representative of *any* choices outside the laboratory. In particular, Houston & McNamara are concerned that Figure 1 in the target article does not include a separate period for handling time. Timberlake feels that this paradigm, as effected in the laboratory, interferes with the usual sequence of search, capture, and handling. Both Moore and Yamamura state that the lack of correspondence between the laboratory paradigm and the world outside the laboratory could be responsible for the lack of adaptive behavior frequently observed in pigeons in the laboratory. All of these concerns revolve around the issue of the extent to which results from laboratory investigations are relevant to behavior outside the laboratory. No one believes that an animal becomes a different being when it enters the laboratory. Likewise, because, by definition, the laboratory differs at least to some degree from the world outside of it, no one believes that what is observed in the laboratory is 100% applicable to that external world. Hence the behavior seen in the laboratory is to some degree relevant to the animal's behavior outside the laboratory; the question is how much. There is no easy answer. Strong proponents can be found representing both extremes of the issue. The only way to answer the question in the case of self-control is to expand investigations to include both a greater variety of laboratory paradigms and a greater variety of field investigations. It is hoped that the target article will stimulate such investigations.

In contrast to those commentators who see the choices described in the target article as unrepresentative of those occurring in nature, some commentators see them as having even wider implications than those that were discussed. For example, **Pomerleau & Pomerleau** describe the applicability of the self-control paradigm to behavioral medicine. **Green & Fisher** mention the relevance of self-control to investing – people must forgo spending money on something now in order to save money for some greater need later. Green & Fisher also point out the intriguing notion that discount rates (see Figure 6 in the target article) may differ depending on cultural experiences and therefore according to socioeconomic group. Such variations in discounting would affect the crossover points in Figure 6 and consequently the degree to which self-control and impulsiveness are shown by a particular socioeconomic group. Several commentators (**Green & Fisher, Imada & Imada, Lowe & Horne,** and **Pomerleau & Pomerleau**) discuss the concept of self-control as applied to the good of society. Individuals within a society must often forgo individual pleasures so that the entire group may benefit – a type of self-sacrificing behavior that could be termed altruism. This topic has been much discussed by evolutionary biologists, many of whom have concluded that altruism is largely a function of increasing inclusive fitness (see, e.g., Wilson 1975). Therefore this may be another example of the usefulness of an overall evolutionary framework for describing self-control. [See also *BBS* multiple book reviews of Lumsden & Wilson's *Genes, mind and culture BBS* 5(1) 1982 and of Kitcher's *Vaulting ambition BBS* 10(1) 1987.]

Misinterpretations of Mischel's social learning paradigm. Several commentators misinterpret either Mischel's work, or how the target article describes it. Some of these misinterpretations were described in the previous section. In addition, the commentary by **Sonuga-Barke** (ironically, given its title) contains a number of misinterpretations of Mischel's research.

First, **Sonuga-Barke** claims that, unlike researchers working with Herrnstein's matching law or molar maximization, Mischel states that self-control is a goal of

development. Hence the target article's final evolutionary analysis, which discusses ways in which impulsiveness can be adaptive, cannot possibly apply to Mischel's work, and this content area cannot be integrated with the other two. This is not a correct interpretation of Mischel's research, however. To quote from the very source (Mischel 1981c) that Sonuga-Barke cites to support his point, "The issue therefore is not delay of gratification in itself, but when, how, and for what one should delay" (p. 457). This source states clearly that people in any society must be able to delay their gratification in many cases; however, delaying gratification is not *always* the best strategy. Mischel's statements are entirely consistent with the points made in the target article.

Sonuga-Barke also claims that research based on Mischel's paradigm cannot be integrated quantitatively with that based on the matching law and molar maximization paradigms because in Mischel's paradigm, with only one choice and no postreinforcer delay, the children may choose the small reinforcer so that, in addition to receiving the small reinforcer, they get to leave the experimental situation sooner. Mischel himself has been aware of this problem, and to eliminate it has tried to make clear to his subjects that both prior to and following the experiment the children will play in a special room; the time in this room is not affected by the choice the child makes (see, e.g., Mischel & Baker 1975; Mischel & Ebbesen 1970). Thus, although there is no explicit postreinforcer delay in the Mischel paradigm, there is an attempt to control overall context.

Finally, the target article never argues that a postreinforcer delay period would serve no useful function in Mischel's one-choice paradigm. Section 3.1.1 states only that postreinforcer delay is not an explicit part of Mischel's procedure. Furthermore, Section 3, as well as the preceding paragraph of this response, points out the value of controlling overall reinforcer frequency (through such means as varying postreinforcer delay) when conducting research on self-control.

Herrnstein's matching law. General reactions to the sections on self-control as investigated by means of Herrnstein's matching law range from that of **Ainslie,** who feels that all of the data could be best described by the matching law, to that of **Zeiler,** who states that, so far, there has been absolutely no evidence to indicate that subjects use the principles of the matching law when they are optimizing. Again, this is a controversial subject, with many proponents on both sides (see, e.g., Commons et al. 1982), one that cannot be resolved or even discussed in detail here given the limited space available. Instead, specific comments concerning the usefulness of the matching law in describing and predicting self-control will be considered.

Ainslie states that a learning account of changes in the discount functions in Figure 6 is an unlikely explanation of self-control because if it were correct, every organism would have been shaped to show maximal self-control through its ordinary life experience. This interpretation assumes, however, that only self-control is beneficial to organisms. As discussed in Section 7 of the target article, there are some situations in which impulsiveness is the better alternative. Hence an organism's past experiences might teach it to be impulsive, rather than to show self-control. In addition, unlike in the laboratory, if an organism is impulsive, it may never experience, and therefore never be able to prefer, the other (larger, more delayed) alternative. Finally, new situations always arise and any past learning is at least somewhat specific to the particular situation in which it occurred; learning may therefore have to recur to some extent in an entirely new situation. For all of these reasons, learned changes in discount functions provide a viable explanation of self-control that has been increased through a fading procedure.

Both **Kuhl** and **Navarick** express concern that the subjects in the matching law experiments discussed in the target article were not tested for their preferences between reinforcers that varied only in amount or delay before being tested for their preference between reinforcers that varied in both amount and delay. Kuhl points out, correctly, that such tests are regularly carried out in Mischel's work, and Navarick points out, also correctly, that such tests are needed to determine whether a subject's self-control is due to a complete insensitivity to delay of reinforcement with that particular type of reinforcement. Although there was not enough space to discuss such tests in the target article, they have, of course, been performed with both pigeons and humans and are described in detail in the original reports. In all of the fading experiments with pigeons described in the target article, a discrete-trials procedure was used in which the pigeons were forced to choose each alternative at least once every 10 trials by making only one alternative available (Logue & Pena-Correal 1984; Logue et al. 1984; Mazur & Logue 1978). In addition, no pigeon, when given choices following completion of the fading procedure, chose the larger, more delayed reinforcer 100% of the time. Hence the fading procedure did not result in the pigeons' ignoring the smaller, less delayed alternative, as Kuhl claims. In most of the experiments with humans (Logue et al. 1986; see Figure 8 for the final results), prior to being tested for self-control or impulsiveness, the subjects were tested with alternatives that varied only in reinforcer delay or in reinforcer amount. In all cases tested they were sensitive to variation in reinforcer delay when reinforcer amount was held constant, and therefore the self-control shown in Figure 8 is not spurious as Navarick claims.

Even if prior testing had revealed the human subjects in Logue et al.'s experiments to be insensitive to variation in reinforcer delay, this does not necessarily make any subsequent self-control shown "spurious." As stated in the target article, self-control is by definition due to insensitivity to reinforcer delay, or to relatively less sensitivity to variation in reinforcer delay than to variation in reinforcer amount. Complete insensitivity and relatively less sensitivity are merely two points on a quantitative continuum measured by the exponents in the generalized matching law, Equation 2 in the target article. The generalized matching law is well suited to describing the cases of more or less sensitivity to variation in reinforcer delay as a function of type of reinforcer or situation that are described by **Navarick.**

In fact, the differences in sensitivity that occur as a function of type of reinforcer are not quite as simple as **Navarick** implies. His commentary states that im-

pulsiveness can probably be obtained in humans when noise termination, video game playing, or viewing slides is the reinforcer, but not when points exchangeable for money are used. However, Logue et al. (submitted) have recently shown that with certain schedules of reinforcement it is indeed possible to obtain consistent impulsiveness in human subjects when points are used as the reinforcer. Laboratory impulsiveness and self-control are, at least to some degree, schedule-specific, and not just reinforcer-specific.

Mazur & Herrnstein focus on an expansion of the absolute response rate form of the matching law (their Equation 1) to better relate direct measurements of reinforcer parameters to direct measurements of behavior. Unfortunately, there are some problems with their exposition. First, they state that reinforcement is a synonym for value, and later that the former is observable but the latter is not. It is therefore difficult to see how these two concepts can be identical. A related problem is Mazur & Herrnstein's claim that their Equations 1 and 2, containing value, have been extensively tested. It is not clear how this was accomplished, if value is unobservable. Furthermore, empirical tests of Mazur & Herrnstein's Equation 1, from which all of their subsequent equations are derived, have sometimes seriously challenged that equation's assumptions (see, e.g., McDowell & Wood 1984; 1985; McSweeney et al. 1983).

Of perhaps greater significance, **Mazur & Herrnstein**'s Equation 3, contrary to what is stated in the commentary, cannot account for all of the data described in the target article, and there have been no published attempts to do so. First, unlike the target article's Equation 2, Mazur & Herrnstein's Equation 3 contains no power functions, which have repeatedly been shown to provide excellent descriptions of both human and nonhuman magnitude judgments of time and other quantities that occur in the self-control paradigm (see, e.g., Eisler 1984; Stevens 1975; Wearden 1980). In addition, unlike Equation 2 in the target article, which in its logarithmic form can be used along with multiple regression to determine the specific values of all free parameters, Mazur & Herrnstein's Equation 3 contains several free parameters, V_e, k, and K, which are difficult or impossible to measure directly. The best that can be done is to use their model to make limited specific predictions for particular cases, for example, as stated in Mazur & Herrnstein's commentary, the intercept of the indifference function relating larger, more delayed, and smaller, less delayed reinforcers should have a value greater than 0.0. In addition, there is apparently another, unstated, free parameter associated with A_i. Mazur & Herrnstein assume only that A_i is monotonically related to reinforcer value, unlike Equation 2 in the target article, which assumes that A_i is a direct measurement of the size of the reinforcer. Therefore in some sense Mazur & Herrnstein are right; with four free parameters their equation can describe virtually any data. Note that adding power functions would add two additional free parameters (the exponents for both amount and delay of reinforcement).

Finally, it seems easy to solve the original problem addressed by **Mazur & Herrnstein:** Figure 6 and Equation 2 incorrectly predict that any small, immediate reinforcer should always be preferred to any large, delayed reinforcer. The solution does not require invoking Mazur & Herrnstein's Equation 2, or the alternative explanation they present and dismiss (that there can never be a 0.0-sec reinforcer delay because it always takes some time to begin eating the reinforcer). Instead, these data can be explained by the hypothesis that organisms simply cannot discriminate between a 0.0-sec and a slightly longer delay. This explanation is similar to the just noticeable difference concept used in psychophysics. If this explanation is accurate, then, within some limits, Figure 6 and Equation 2 are both correct.

Molar maximization. Once again, in their remarks on molar maximization, the commentators express widely divergent opinions. Some, such as **Mazur & Herrnstein,** feel that molar maximization is completely inadequate for describing data on self-control, and others, such as **Hinson,** feel that it is the best alternative. This section will first discuss the specific criticisms raised by the commentators of the time-window concept as used in molar maximization, and then the commentators' expansions on the target article's presentation of molar maximization research.

Several commentators (**Ainslie, Mazur & Herrnstein,** and **Timberlake**) express doubt regarding the usefulness of the time horizon concept in describing and predicting variation in self-control. Although Timberlake has himself stated that organisms' time horizons can change as a function of the particular situation (Timberlake et al. 1987), in his commentary he suggests that it is stretching credibility to postulate a time horizon of a few seconds for pigeons responding in a self-control paradigm, but a time horizon of many minutes for pigeons responding according to concurrent variable-interval/variable-interval schedules. Ainslie points out the difficulty in describing preference reversals: Organisms will prefer a larger, more delayed reinforcer over a smaller, less delayed reinforcer when the choice is made far enough in advance, but when the choice is made with very little time remaining until receipt of the smaller reinforcer, organisms are more likely to prefer the smaller, less delayed reinforcer (i.e., preference reverses as a function of time to reinforcement).

Responding to these criticisms by simply eliminating the concept of a time horizon creates other problems. Then, contrary to **Caraco**'s interpretation, if overall reinforcer frequency is controlled, as is assumed by the target article for many of its examples, no matter what type of optimal foraging model is used, molar maximization predicts that the larger, more delayed reinforcer should be chosen.

Some mechanism in addition to a time horizon is apparently necessary to describe the variations in self-control and impulsiveness that are observed as a function of reinforcer delay in a self-control paradigm. As discussed in Section 4.1.2, the hyperbolas shown in Figure 6 and derived from the matching law can describe and predict such effects. Therefore, as suggested by **Mazur & Herrnstein,** the solution might be to incorporate hyperbolic discounting of reinforcer value as a function of reinforcer delay within molar maximization models.

However, contrary to Mazur & Herrnstein's subsequent conclusion, this does not mean that molar maximization would then always predict impulsiveness, in opposition to the very premise of *molar* maximization. Just as the matching law, based on these same hyperbolas, can predict either self-control or impulsiveness according to the shapes of the hyperbolas and the use of precommitment devices (see Sections 4.1.2 and 5.2.3 of the target article), so too could molar maximization. However, Mazur & Herrnstein seem to find even the possibility of impulsiveness antithetical to a molar maximization model. Nevertheless, as stated clearly in Section 5.3, molar maximization theorists have never intended their models to always predict maximization over long time periods. Molar maximization occurs within perceptual and response constraints, and one of those constraints could be that reinforcer value is discounted as a function of delay according to hyperbolas.

Some commentators discussed expansions of the presentation of molar maximization. **Caraco** and **Fantino & Preston** point out that the optimal foraging model presented in Section 4.2 is the traditional, classic model for sequential encounters of prey, and Caraco expresses concern that the type of self-control paradigm discussed in the target article involves simultaneous encounters with food items. Caraco states that newer, simultaneous encounter models (e.g., Engen & Stenseth 1984; Stephens et al. 1986) might be more appropriate in applying molar maximization to the self-control paradigm. First, the sequential model presented in Section 4.2 is just one of several models mentioned in the target article. That particular one is presented only as the best-known example of molar maximization models, not as the definitive model for the self-control paradigm. Simultaneous models are also mentioned in Section 4.2. Second, it is not clear that the simultaneous-encounter models are much better suited for the self-control paradigm than is the sequential model presented in detail in the target article. For example, in the paradigm modeled by Stephens et al. (1986), both prey were in view simultaneously; a choice for one alternative could always be changed to a choice for the other alternative, and once the farther (more delayed) alternative was chosen (approached), the nearer (less delayed) alternative was no longer near. This situation is not comparable to any self-control paradigm yet studied in the operant conditioning laboratory. One could argue that the sequential-encounter model presented in the target article is more appropriate than a simultaneous-encounter model for self-control paradigms in which a subject cannot observe both reinforcers simultaneously, such as the example for foraging monkeys given in **Zeiler**'s commentary. Nevertheless, the commentaries are useful in emphasizing that there are many alternative models, that a large variety of choice situations occur, and that some models are therefore better suited for some situations than are others.

Fantino & Preston describe how the delay reduction hypothesis, originally developed in the operant conditioning laboratory, can be applied to foraging situations (see Fantino & Abarca 1985), particularly those situations involving choices between simultaneously encountered reinforcers varying in size and delay. They suggest various ways that their hypotheses could be tested. Experiments such as theirs will be useful in evaluating which type of molar maximization model is most appropriate for particular choice situations.

Caraco correctly states that the definition of λ_i in the optimal foraging model presented in Section 4.2 is not entirely accurate. λ_i is defined as the frequency with which the prey is encountered in the environment. According to Caraco (and others, for a summary see Stephens & Krebs 1986), λ_i is the frequency with which food is encountered while the forager is searching for food, not while pursuing or handling it. According to this interpretation, λ_i would be equivalent to $1/C_i$ (where C_i is equal to choice time, see Figure 1 in the target article), rather than $1/(C_i + D_i + A_i + T_i)$, where D_i, A_i, and T_i are prereinforcer delay, reinforcer access time, and postreinforcer delay, respectively (see Figure 1).

Both **Caraco** and **Houston & McNamara** comment that Caraco's and others' research on risk-prone behavior did not seem relevant to impulsiveness, as the target article claims. In Caraco's paradigm (Caraco 1983; Caraco et al. 1980), subjects are given choices between (a) a medium amount of food that they can have for sure, or (b) a small amount of food with a probability of .5 and a large amount of food with a probability of .5. When subjects are receiving less food than they need to survive, they tend to pick alternative (b), the "risky" alternative; when they are receiving more food than they need to survive, they tend to pick alternative (a), the "safe" alternative. The intent of the target article was merely to show that subjects will prefer an ordinarily nonpreferred alternative if that alternative at least provides the possibility of allowing them to survive (as occurs in the self-control paradigm with the smaller, less delayed reinforcer), whereas the other alternative will not (as could occur in the self-control paradigm with the larger, more delayed reinforcer). The intention was never to equate this paradigm with the self-control paradigm.

Finally, several commentaries (**Hinson, Houston & McNamara, Yamamura,** and **Zeiler**) highlight the variety present in molar maximization models with respect to constructing operational definitions of maximization and inclusive fitness. In some research, maximization and inclusive fitness can be approximated by individual survival, but in others it cannot. Whether one is reading the work of optimal foraging researchers or attempting to relate research from this field to other fields (as in the target article) it is important to remember that the optimal foraging literature is large and varied, and by no means unified in theoretical stance or interpretation.

Perceived reinforcement and the cognitive–behavioral controversy. After describing the three content areas, the target article introduces the concept of perceived reinforcement in Section 6 and offers an analogy with model building in chemistry, in which hypothetical molecular properties have been proposed to account for molar observations. Some commentators feel much more comfortable with this approach than do others. For example, **Carver** thinks that the concept of perceived reinforcement should be extended even further, to control theory, which involves a consideration of an organism's goals

(although he never specifies how goals can be operationally defined or objectively measured). Both **Eisenberger** and **Timberlake** consider the concept of perceived reinforcement to be useful. In contrast, **Fantino & Preston, Lowe & Horne,** and **Moore** have some doubts about its use. In particular, Fantino & Preston make the point that chemists do not use the concept of perception to describe a liquid's viscosity, and Lowe & Horne state that to use the concept of perception in this way is to risk dualism. Both of these commentaries suggest that the use of the term "perceived reinforcement" implies some active reorganization of the environment by the organism, a reorganization that can be independent of environmental contingencies.

Because different commentators appear to have different interpretations of the concept of perceived reinforcement presented in the target article, resolving the disputes depends on establishing precisely what the target article means by the term "perception." Although the target article states that we need this term because there is no isomorphism between the environment and behavior, this is not all that is meant, as **Eisenberger** astutely observes. For psychologists whose main field of research is sensation and perception, the term "perception" is used when there are many unobservable factors influencing the relationship between stimuli and behavior and when the underlying physiological mechanisms are not understood. When they are understood, so that the mechanisms involved appear to be relatively simple, the term "sensation" is generally used (see, e.g., Gleitman 1986; Schiffman 1982). Likewise in theoretical chemistry and in physics, hypothetical, unobservable mechanisms are postulated only when the equations describing the observed events are not completely known. In the case of **Fantino & Preston**'s example of viscosity, all of the equations necessary to describe viscosity have been determined. In other cases, such as the structure of quarks or the interactions of particles at extremely high energies, all of the equations are not yet known. Only in these cases is it necessary for physicists to postulate new, as yet unobservable, mechanisms.

Much of psychology is at the same stage as is physics in explaining the actions of quarks and the interactions of particles at high energies. Mischel's hot and cool thoughts, the exponents in the matching law, and the time horizon concept in molar maximization all suggest mechanisms according to which environmental stimulation is transformed into behavior. As stated in the target article, these mechanisms do not necessarily exist, nor do they have a life of their own. Therefore dualism is not a problem. If at some point these mechanisms are entirely understood, very possibly through an understanding of the physiological changes that occur during different types of self-control paradigms, as suggested by **Pomerleau & Pomerleau,** then the concept of perception may no longer be needed. In the target article the term "perceived reinforcement" is used both for its heuristic value in encouraging model development and testing and to demonstrate that it can be used within the framework of good science. If perception is defined as it is in the target article, and not as it is ordinarily used, then chemists and physicists would indeed be willing to say that particles interacting at high energies "perceive" each other.

Perhaps it would be better to pick another term for perception, one that does not carry so much excess baggage for so many people. One possibility might be to substitute the term "approximate theory", which is used in physics and chemistry to describe phenomena for which the underlying equations or mechanisms are not yet known.

The issue of the usefulness of the concept of perceived reinforcement is a subset of the behaviorism–cognitivism controversy. Among psychologists, there are those who say that the focus should be on observable behavior and those who say that this approach is insufficient, cognitive processes such as memory being critical. Some commentators (e.g., **Lowe & Horne**) feel that the target article is generally too cognitively oriented, but others (e.g., **Kuhl**) feel that it is generally too behaviorally oriented. More specifically, Kuhl thinks that the study of self-control should focus on underlying mental processes. In a similar vein, though not as extreme, **Hinson** states that investigations of the matching law are merely exercises in curve fitting unless the parameters are given some sort of psychological explanation (consistent with the perceived reinforcement approach described above). In addition, although Lowe & Horne feel that the target article is too cognitive, they devote significant space in their commentary to giving credence to verbal reports of self-instructions and imagination. **Pomerleau & Pomerleau** likewise favor a behavioral approach, but their commentary states that what is important to study in patients is their "capacity" or "ability" to show self-control, traits for which it may be difficult to construct operational definitions. These are good examples of the target article's contention that behaviorism and cognitive psychology are really not so very different. Scientific inquiry is impossible without sometimes postulating hypothetical mechanisms. It is also impossible to observe hypothetical mechanisms directly. In psychology the only verifiable data are direct measurements of organisms' behavior. These statements are true whether one is a behaviorist or a cognitive psychologist; any other way of doing research is simply not good research.

Explanations of impulsiveness and self-control. Many commentators expand on the possible mechanisms responsible for impulsiveness and self-control discussed in the target article. Several commentators are concerned with explanations of why the fading procedure increases self-control in pigeons. The target article mentions the possibility of changes in the speed with which time passes. **Eisenberger** adds adaptation level to reinforcer delay, as well as counterconditioning of frustration. **Green & Fisher** mention the possibility of covert commitment strategies. **Kuhl** focuses on learning to disregard differential delays. With regard to impulsiveness, **Caraco, Green & Fisher, Houston & McNamara, Yamamura,** and **Zeiler** all agree with the target article that, for many reasons, impulsiveness can be adaptive. Green & Fisher suggest several ways to test the hypothesis that the uncertainty of events is one of these reasons. Zeiler makes the useful point that events are only certain from the

programmer's point of view, and therefore waiting for a larger reinforcer may appear fruitless from the subject's point of view.

The most ambitious attempt to explain impulsiveness and self-control is **Timberlake**'s description of a behavioral system. According to Timberlake's hypothesis, certain types of behaviors tend to occur together, and these sets of behaviors tend to occur in different situations with different probabilities. Certain sets may encourage self-control and certain sets impulsiveness. In general, according to Timberlake, any behavioral set (termed the "general search mode") that does not include responses directly related to obtaining the reinforcers in the self-control paradigm is likely to result in self-control and vice versa (i.e., focal search mode results in impulsiveness). Hence if one mode or another can be encouraged or discouraged, self-control and impulsiveness can be manipulated. Timberlake's hypothesis could be considered a behavioral version of Mischel's hot and cool thoughts, and might enable precise empirical tests of some of Mischel's theories (see also recent behavioral tests of differential attention predicting delay of gratification; Rodriguez & Mischel 1987).

These provocative hypotheses will provide sufficient material for a great many future experiments.

Evolutionary framework and the continuity of the species. Given the content of the previous sections of this response, it probably comes as no surprise that the commentaries also disagree on the usefulness of the evolutionary framework. **Eisenberger** states that knowledge of possible evolutionary mechanisms is not yet sufficiently developed to be sure that an evolutionary framework will be useful. On the other hand, **Caraco, Carver, Hinson, Moore, Shimoff & Catania,** and **Timberlake** have no difficulty with the usefulness of such a framework, although they may wish it modified to a greater or lesser extent. Several of these latter commentaries expand on the evolutionary mechanisms presented in the target article. For example, Carver writes about the possibility of evolution of specific behaviors versus general abilities. Because Timberlake apparently sees the structure of his postulated behavioral systems as resulting from natural selection, his hypotheses can be taken as additional support for the usefulness of an evolutionary framework in understanding self-control. Shimoff & Catania make the important point that similar behaviors do not necessarily arise from the same evolutionary mechanisms. However, what they do not point out is that dissimilar origins for similar behaviors are only critical – and can only be identified – if these behaviors are not precisely identical. Unlike the evolution of anatomical characteristics such as the Panda's thumb, we cannot look at ancient specimens to determine exactly how a certain feature evolved. Assuming that the underlying physiological mechanisms are unknown, the only way we can try to test evolutionary hypotheses about a behavior is to carefully examine the current form and function of that behavior within its environmental context. If this behavior–environment relationship is precisely identical to other behavior–environment relationships, then it will be impossible to determine whether any of these relationships arose from different evolutionary processes.

This is not the sole point of **Shimoff & Catania**'s commentary, however. They, along with **Lowe & Horne** and to some extent also **Navarick,** state that humans are different from nonhumans, that our language behavior makes the rules that govern our self-control and impulsiveness so different from nonhumans as to render describing humans and nonhumans by the same evolutionary processes useless. The commentators make these statements despite the fact that there are many aspects of nonhuman behavior in a self-control paradigm discussed in the target article that are functionally similar to just those aspects of human behavior that these commentators consider unique. Space limitations allow just two examples here. First, the colored overhead lights used during reinforcer delays by Mazur and Logue (1978), and those of the same color as the alternative on which the pigeons had responded (see Figure 3 in the target article), were shown by Logue and Mazur (1981) to be essential to the maintenance of self-control acquired through the fading procedure. Given our present knowledge, there is little difference between the function of these lights and the "reminders" that human subjects claim to use during delay periods in order to demonstrate self-control (see Mischel & Mischel 1983). Second, the experiments using the fading procedure (Logue et al. 1984; Logue & Pena-Correal 1984; Mazur & Logue 1978) clearly demonstrate that ontogenetic factors are important in determining whether self-control or impulsiveness is shown in pigeons, and not just in humans as Shimoff & Catania imply.

Much other research, not mentioned in the target article, also supports the contention that human behavior in a self-control paradigm is unlikely to be qualitatively different from nonhuman behavior. Again, only a few examples can be given here. First, Hursh (1987) has recently reported the results of experiments on self-control with rhesus monkeys. He has shown that, despite their lack of overt verbal behavior similar to that of humans, these monkeys tend to show self-control, as do humans, and not impulsiveness, as shown by pigeons. Similar findings have been obtained by van Haaren et al. (1988) with rats. Therefore, contrary to what is suggested by the commentators, complex verbal behavior is not the critical controlling variable in the demonstration of self-control or impulsiveness. Second, "sociocultural" factors (see **Lowe & Horne**'s commentary) affect nonhuman as well as human behavior. Rats will learn to avoid a recently consumed food merely by spending a few minutes with a sick rat (Lavin et al. 1980), and rats are more likely to prefer a particular food after having interacted with another rat which has eaten the food, even if the food is not present during the interaction (Galef 1985). Finally, although **Lowe & Horne**'s statement that many experiments with human subjects have obtained undermatching is true, there are also experiments with nonhuman subjects that have obtained undermatching (e.g., Logue 1979a) and experiments with human subjects that have obtained matching (e.g., Baum 1975).

Unless these commentators can show that the behavior of nonhuman subjects is qualitatively different from that of human subjects, they are depriving themselves as well

as other researchers of the benefits of using findings from experiments with nonhuman subjects in trying to understand the behavior of human subjects. This is not to say that the principles governing human and nonhuman behavior are identical. But these differences may be quantitative rather than qualitative, differences of degree rather than kind. A similar discussion regarding comparisons of illness-induced food aversion learning with other types of learning was finally resolved with general agreement that these types of learning are quantitatively but not qualitatively different (see, e.g., Domjan 1983; Logue 1979b; Revusky 1977), and that illness-induced food aversion learning tends to occur similarly in a variety of species including humans (Logue 1988). Although it is true that evolution does not necessarily result in the evolution of identical behaviors and that species are different, all species do inhabit a world governed by the same physical laws and so are subject to at least some of the same evolutionary pressures. For example, with respect to self-control, as was mentioned in the target article, the longer the delay until a reinforcer is received, the greater the possibility that the reinforcer will never be received. Such a phenomenon may make all species, human and nonhuman, discount delayed reinforcers. Discounting may be greater for some species than others, and it may be greater in some situations than others, but it should exist in all cases to some extent. Similar principles must govern human and nonhuman behavior in a self-control paradigm, at least to some degree. An overall evolutionary framework can be helpful not only in understanding the mechanisms underlying self-control and impulsiveness, but in making comparisons between species.

Conclusion. Some, but by no means all, of the comments overtly acknowledge the objective of the target article: to increase communication between researchers working on problems that can be encompassed within a self-control paradigm by pointing out similarities in these researchers' methods, theories, and data. It is easy to become absorbed in arguments over this or that technical point within a particular content area, and such arguments do serve a function in testing existing models. However, a greater number of new ideas and models can be generated if researchers take the time to consider different types of approaches and to communicate with one another. Let us not, like **Imada & Imada**'s monkeys, be happy with three pieces of food that we can have now when we can have four pieces later. Let us expend the extra effort necessary to understand what researchers in other areas are trying to accomplish; we just may end up with a big reinforcer.

ACKNOWLEDGMENTS
Preparation of this response was supported by NSF Grant BNS-8416302, A. W. Logue Principal Investigator. Helpful comments by G. R. King, M. L. Rodriguez, and J. L. Skinner are very much appreciated.

Requests for reprints should be sent to A. W. Logue, Department of Psychology, State University of New York at Stony Brook, Stony Brook, NY 11794-2500.

References

Abarca, N. & Fantino, E. (1982) Choice and foraging. *Journal of the Experimental Analysis of Behavior* 38:117–23.
Ach, N. (1910) *Über den Willensakt und das Temperament*. Quelle & Meyer.
Ainslie, G. W. (1974) Impulse control in pigeons. *Journal of the Experimental Analysis of Behavior* 21:485–89.
(1975) Specious reward: A behavioral theory of impulsiveness and impulse control. *Psychological Bulletin* 82:463–96.
(1984) Behavioral economics II: Motivated, involuntary behavior. *Social Science Information* 23:247–74.
(1987) Aversion with only one factor. In: *Quantitative analyses of behavior: Vol. 5. The effect of delay and of intervening events on reinforcement value*, ed. M. L. Commons, J. E. Mazur, J. A. Nevin & H. Rachlin. Erlbaum.
(1988) An experimental model of intertemporal conflict. In: *Quantitative analyses of behavior*, vol. 9, *Behavioral economics*, ed. M. L. Commons, J. C. Cross, R. J. Herrnstein & W. Vaughan. Erlbaum.
(forthcoming) *Picoeconomics: The interaction of successive motivational states within the individual*. Cambridge University Press.
(in preparation) Internal self-control in pigeons.
Ainslie, G. & Herrnstein, R. J. (1981) Preference reversal and delayed reinforcement. *Animal Learning & Behavior* 9:476–82.
Allison, J. (1981) Economics and operant conditioning. In: *Predictability, correlation, and contiguity*, ed. P. Harzem & M. D. Zeiler. Wiley.
Anderson, W. H. & Moreland, K. L. (1982) Instrumental vs. moralistic self-verbalizations in delaying gratification. *Merrill-Palmer Quarterly* 28:291–96.
Barnard, C. J. & Brown, C. A. J. (1985) Risk-sensitive foraging in common shrews (*Sorex araneus* L.). *Behavioral Ecology and Sociobiology* 16:161–64.
Barnard, C. J., Brown, C. A. J., Houston, A. I. & McNamara, J. M. (1985) Risk-sensitive foraging in common shrews: An interruption model and the effects of mean and variance in reward rate. *Behavioral Ecology and Sociobiology* 18:139–46.
Baron, A. & Galizio, M. (1983) Instructional control of human operant behavior. *Psychological Record* 33:495–520.
Baum, W. M. (1972) Choice in a continuous procedure. *Psychonomic Science* 28:263–65.
(1974a) Choice in free-ranging wild pigeons. *Science* 185:78–79.
(1974b) On two types of deviation from the matching law: Bias and undermatching. *Journal of the Experimental Analysis of Behavior* 22:231–42.
(1975) Time allocation in human vigilance. *Journal of the Experimental Analysis of Behavior* 23:45–53.
(1979) Matching, undermatching, and overmatching in studies of choice. *Journal of the Experimental Analysis of Behavior* 32:269–81.
Baum, W. M. & Rachlin, H. (1969) Choice as time allocation. *Journal of the Experimental Analysis of Behavior* 12:861–74.
Bentall, R. P. & Lowe, C. F. (1987) The role of verbal behavior in human learning: III. Instructional effects in children. *Journal of the Experimental Analysis of Behavior* 47:177–90.
Bentall, R. P., Lowe, C. F. & Beasty, A. (1985) The role of verbal behavior in human learning: II. Developmental differences. *Journal of the Experimental Analysis of Behavior* 43:165–81.
Brigham, T. A. (1982) Self-management: A radical behavioral perspective. In: *Self-management and behavior change*, ed. P. Karoly & F. Kaufer. Pergamon Press.
Burns, D. J. & Powers, R. B. (1975) Choice and self-control in children: A test of Rachlin's model. *Bulletin of the Psychonomic Society* 5:156–58.
Caraco, T. (1980) On foraging time allocation in a stochastic environment. *Ecology* 61:119–28.
(1983) White-crowned sparrows (*Zonotrichia leucophrys*): Foraging preferences in a risky environment. *Behavioral Ecology and Sociobiology* 12:63–69.
(1985) Encounter processes, prey densities, and efficient diets. *Behavioral and Brain Sciences* 8:333–34.
Caraco, T. & Chasin, M. (1984) Foraging preferences: Response to reward skew. *Animal Behaviour* 32:76–85.
Caraco, T. & Lima, S. L. (1985) Foraging juncos: Interaction of reward mean and variability. *Animal Behaviour* 33:216–24.
Caraco, T., Martindale, S. & Whittam, T. S. (1980) An empirical demonstration of risk-sensitive foraging preferences. *Animal Behaviour* 28:820–30.

Carver, C. S. & Scheier, M. F. (1981) *Attention and self-regulation: A control theory approach to human behavior*. Springer-Verlag.
Catania, A. C. (1984) *Learning* (2nd ed.). Prentice-Hall.
Charnov, E. L. (1976) Optimal foraging: Attack strategy of a mantid. *American Naturalist* 110:141–51.
Chavarro, A. & Logue, A. W. (1987) *Experimental analysis of impulsiveness and self-control in preschool children*. Poster presented at the meeting of the American Psychological Association, New York, N.Y.
(1988) Sensitivity to amount and delay of reinforcement: Effects of different types of concurrent variable-interval schedules. *Psychological Record* 38:421–35.
Christensen-Szalanski, J. J. J., Goldberg, A. D., Anderson, M. E. & Mitchell, T. R. (1980) Deprivation, delay of reinforcement, and the selection of behavioral strategies. *Animal Behaviour* 28:341–46.
Chung, S.-H. & Herrnstein, R. J. (1967) Choice and delay of reinforcement. *Journal of the Experimental Analysis of Behavior* 10:67–74.
Cohen, S. & Syme, S. L., eds. (1985) *Social support and health*. Academic Press.
Collier, G. H. (1982) Determinants of choice. In: *Nebraska Symposium on Motivation 1981*, ed. D. J. Bernstein. University of Nebraska Press.
Collier, G. H. & Rovee-Collier, C. K. (1981) A comparative analysis of optimal foraging behavior: Laboratory simulation. In: *Foraging behavior: Ecological, ethological, and psychological approaches*, ed. A. C. Kamil & T. Sargent. Garland Press.
Commons, M. L., Herrnstein, R. J. & Rachlin, H., eds. (1982) *Quantitative analyses of behavior*. Vol. 2: *Matching and maximizing accounts*. Ballinger.
Conger, R. & Killeen, P. (1974) Use of concurrent operants in small group research. *Pacific Sociological Review* 17(4):399–416.
Copeland, A. P. (1983) Children's talking to themselves: Its developmental significance, function, and therapeutic promise. In: *Advances in cognitive behavioral research and theory*, vol. 2, ed. P. C. Kendall. Academic Press.
Cornell, H. (1976) Search strategies and the adaptive significance of switching in some general predators. *American Naturalist* 110:317–20.
Cowie, R. J. (1977) Optimal foraging in great tits (*Parus major*). *Nature* 268:137–39.
Crick, F. H. C. (1979) Thinking about the brain. *Scientific American* 241:219–32.
Cronin, P. B. (1980) Reinstatement of postresponse stimuli prior to reward in delayed-reward discrimination learning by pigeons. *Animal Learning & Behavior* 8:352–58.
Crooks, R. C. (1977) Magnitude of reward and preference in a delayed-reward situation. *Psychological Reports* 40:1215–19.
Davison, M. (1982) Preference in concurrent variable-interval fixed-ratio schedules. *Journal of the Experimental Analysis of Behavior* 37:81–96.
Deluty, M. Z., Whitehouse, W. G., Mellitz, M. & Hineline, P. N. (1983) Self-control and commitment involving aversive events. *Behaviour Analysis Letters* 3:213–19.
de Villiers, P. (1977) Choice in concurrent schedules and a quantitative formulation of the law of effect. *Handbook of operant behavior*, ed. W. K. Honig & J. E. R. Staddon. Prentice-Hall.
Dinsmoor, J. A. (1984) *The cognitive challenge in historical perspective*. Paper presented at the Association for Behavior Analysis, Nashville, Tenn.
Domjan, M. (1983) Biological constraints and the pursuit of general theories of learning. In: *Animal cognition and behavior*, ed. R. L. Mellgren. North-Holland.
Dow, S. M. & Lea, S. E. G. (1987) Foraging in a changing environment: Simulations in the operant laboratory. In: *Quantitative analyses of behavior*. Vol. 6: *Foraging*, ed. M. L. Commons, A. Kacelnik & S. J. Shettleworth. Erlbaum.
Dunn, R. & Fantino, E. (1982) Choice and the relative immediacy of reinforcement. *Journal of the Experimental Analysis of Behavior* 38:321–26.
Eisenberger, R. & Adornetto, M. (1986) Generalized self-control of delay and effort. *Journal of Personality and Social Psychology* 51:1020–31.
Eisenberger, R. & Masterson, F. A. (1986) Effects of prior learning and current motivation on self-control. In: *Quantitative analyses of behavior*. Vol. 5: *The effect of delay and of intervening events on reinforcement value*, ed. M. L. Commons, J. A. Nevin & H. Rachlin. Erlbaum.
Eisenberger, R., Masterson, F. A. & Lowman, K. (1982) Effects of previous delay of reward, generalized effort, and deprivation on impulsiveness. *Learning and Motivation* 13:378–89.
Eisler, H. (1984) Subjective duration in rats: The psychophysical function. In: *Timing and time perception*, ed. J. Gibbon & L. Allan. New York Academy of Sciences.
Engen, S. & Stenseth, N. C. (1984) A general version of optimal foraging theory: The effect of simultaneous encounters. *Theoretical Population Biology* 26:192–204.
Fantino, E. (1969) Choice and rate of reinforcement. *Journal of the Experimental Analysis of Behavior* 12:723–30.
(1977) Conditioned reinforcement: Choice and information. In: *Handbook of operant behavior*, ed. W. K. Honig & J. E. R. Staddon. Prentice-Hall.
(1981) Contiguity, response strength, and the delay-reduction hypothesis. In: *Predictability, correlation, and contiguity*, ed. P. Harzem & M. H. Zeiler. Wiley.
(1985) Behavior analysis and behavioral ecology: A synergistic coupling. *The Behavior Analyst* 8:151–57.
Fantino, E. & Abarca, N. (1985) Choice, optimal foraging, and the delay-reduction hypothesis. *Behavioral and Brain Sciences* 8:315–62.
Ferster, C. B. (1953) Sustained behavior under delayed reinforcement. *Journal of Experimental Psychology* 45:218–24.
Fisher, E. B., Jr. (1982) Prevention in adulthood: Self-motivated quitting, and, Prevention in adulthood: Maintenance of cessation. (Principal author) In: *The health consequences of smoking: Cancer: A report of the surgeon general*. U. S. Department of Health and Human Services, DHHS (PHS) Pub. No. 82-50179.
(1986) A skeptical perspective: The importance of behavior and environment. In: *Self-management of chronic disease: Recent developments in health psychology and behavioral medicine*, ed. K. A. Holroyd & T. L. Creer. Academic Press.
Fisher, E. B., Jr., Levenkron, J. C., Lowe, M. R., Loro, A. D., Jr. & Green, L. (1982) Self-initiated self control in risk reduction. In: *Adherence, generalization, and maintenance in behavioral medicine*, ed. R. Stuart. Brunner/Mazel.
Fisher, I. (1960) *The theory of interest*. Macmillan.
Furnham, A. & Lewis, A. (1986) *The economic mind: The social psychology of economic behaviour*. Harvester.
Galef, B. G. (1985) Social learning in wild Norway rats. In: *Issues in the ecological study of learning*, ed. T. D. Johnston & A. T. Pietrewicz. Erlbaum.
Gibbon, J. (1977) Scalar expectancy theory and Weber's law in animal timing. *Psychological Review* 84:279–325.
Gleitman, H. (1986) *Psychology*. Norton.
Goldfried, M. R. & Merbaum, M., eds. (1973) *Behavior change through self-control*. Holt, Rinehart and Winston.
Gray, L. (1985) The environmental dimensions that influence behavior. In: *Issues in the ecological study of learning*, ed. T. D. Johnston & A. T. Pietrewicz. Erlbaum.
Green, L., Fisher, E. B., Jr., Perlow, S. & Sherman, L. (1981) Preference reversal and self-control: Choice as a function of reward amount and delay. *Behaviour Analysis Letters* 1:43–51.
Green, L. & Snyderman, M. (1980) Choice between rewards differing in amount and delay: Toward a choice model of self-control. *Journal of the Experimental Analysis of Behavior* 34:135–47.
Green, R. F. (1980) Bayesian birds: A simple example of Oaten's stochastic model of optimal foraging. *Theoretical Population Biology* 18:244–56.
Grosch, J. & Neuringer, A. (1981) Self-control in pigeons under the Mischel paradigm. *Journal of the Experimental Analysis of Behavior* 35:3–21.
Hall-Johnson, E. & Poling, A. (1984) Preference in pigeons given a choice between sequences of fixed-ratio schedules: Effects of ratio values and duration of food delivery. *Journal of the Experimental Analysis of Behavior* 42:127–35.
Hamblin, R. L. & Miller, H. L. (1977) Matching as a multivariate power law: Frequency of behavior versus frequency and magnitude of reinforcement. *Learning and Motivation* 8:113–25.
Hamilton, W. D. (1964a) The genetical evolution of social behavior. I. *Journal of Theoretical Biology* 7:1–16.
(1964b) The genetical evolution of social behavior. II. *Journal of Theoretical Biology* 7:17–52.
Hellman, R. P. (1981) Stability of individual loudness functions obtained by magnitude estimation and production. *Perception & Psychophysics* 29:63–70.
Herrnstein, R. J. (1970) On the law of effect. *Journal of the Experimental Analysis of Behavior* 13:243–66.
(1981) Self-control as response strength. In: *Quantification of steady-state operant behavior*, ed. C. M. Bradshaw, E. Szabadi & C. F. Lowe. Elsevier/North-Holland.
Herrnstein, R. J. & Vaughan, W. (1980) Melioration and behavioral allocation.

In: *Limits to action: The allocation of individual behavior*, ed. J. E. R. Staddon. Academic Press.
Herzberger, S. D. & Dweck, C. S. (1978) Attraction and delay of gratification. *Journal of Personality* 46:214–27.
Hineline, P. N. (1970) Negative reinforcement without shock reduction. *Journal of the Experimental Analysis of Behavior* 14:259–68.
Hinson, J. M. & Staddon, J. E. R. (1983) Hill-climbing by pigeons. *Journal of the Experimental Analysis of Behavior* 39:25–47.
Holland, J. G. (1960) Teaching machines: An application of principles from the laboratory. *Journal of the Experimental Analysis of Behavior* 3:275–87.
Holzman, L. H. (1985) Pragmatism and dialectical materialism in language development. In: *Children's language*, vol. 5, ed. K. E. Nelson. Erlbaum.
Horne, P. J. (1986) *Human choice and the matching law: The role of verbal behaviour*. Unpublished doctoral thesis: University College of North Wales, Bangor, U.K.
Houston, A. (1986) The matching law applies to wagtails' foraging in the wild. *Journal of the Experimental Analysis of Behavior* 45:15–18.
Houston, A. I. & McNamara, J. M. (1984) Imperfectly optimal animals. *Behavioral Ecology and Sociobiology* 15:61–64.
(1985) The choice of two prey types that minimises the probability of starvation. *Behavioral Ecology and Sociobiology* 17:135–41.
(1988) A framework for the functional analysis of behaviour. *Behavioral and Brain Sciences* 11:117–33.
Hughes, R. N. (1979) Optimal diets under the energy maximization premise: The effects of recognition time and learning. *American Naturalist* 13:209–21.
Hunter, I. & Davison, M. (1982) Independence of response force and reinforcement rate on concurrent variable-interval schedule performance. *Journal of the Experimental Analysis of Behavior* 37:183–97.
Hursh, S. R. (1980) Economic concepts for the analysis of behavior. *Journal of the Experimental Analysis of Behavior* 34:219–38.
(1984) Behavioral economics. *Journal of the Experimental Analysis of Behavior* 42:435–52.
(1987) *Optimal choice in primates*. Paper presented at the Annual Meeting of the American Psychological Association, New York, N.Y.
Imada, H. & Nageishi, Y. (1982) The concept of uncertainty in animal experiments using aversive stimulation. *Psychological Bulletin* 91:573–88.
Imada, S., Fujii, M., Nakagawa, R., Iso, H., Sugioka, K. & Imada, H. (1983) An attempt to measure effects of electric shock upon rat's drinking, eating and general activities over 24 hours a day. *Japanese Psychological Research* 25:52–57.
Imada, S., Kondo, H. & Imada, H. (1985) Effects of shocks, presented at a fixed time of day, on appetitive and general activity of rats. *Animal Learning and Behavior*. 13:194–200.
Imada, S., Yamashita, H., Shimazaki, T. & Imada, H. (in preparation) The long-term effects of the signaled/unsignaled shocks on rat's appetitive and general activities.
Ito, M. & Fantino, E. (1986) Choice, foraging, and reinforcer duration. *Journal of the Experimental Analysis of Behavior* 46:93–103.
Kacelnik, A. & Houston, A. I. (1984) Some effects of energy costs on foraging strategies. *Animal Behaviour* 32:609–14.
Kagan, J. (1984) *The nature of the child*. Basic Books.
Kagan, J. & Kogan, N. (1970) Individual variation in cognitive processes. In: *Carmichael's manual of child psychology* (3rd ed.), ed. P. H. Mussen. Wiley.
Kagan, J., Rosman, B. L., Day, D., Albert, J. & Phillips, W. (1964) Information processing in the child: Significance of analytic and reflective attitudes. *Psychological Monographs* 78 (Whole No. 578).
Kagel, J. H., Battalio, R. C., White, S., MacDonald, D. N. & Green, L. (1986) Risk aversion in rats (*Rattus norvegicus*) under varying levels of resource availability. *Journal of Comparative Psychology* 100:95–100.
Kagel, J. H. & Green, L. (1987) Intertemporal choice behavior: Evaluation of economic and psychological models. In: *Advances in behavioral economics*, vol. 1, ed. L. Green & J. H. Kagel. Ablex.
Kagel, J. H., Green, L. & Caraco T. (1986) When foragers discount the future: Constraint or adaptation? *Animal Behaviour* 34:271–83.
Kahneman, D. & Tversky, A. (1984) Choices, values, and frames. *American Psychologist* 39:341–50.
Kamil, A. C. & Sargent, T. D. (1981) Introduction: In: *Foraging behavior: Ecological, ethological, and psychological approaches*, ed. A. C. Kamil & T. D. Sargent. Garland.
Kanfer, F. H. & Goldfoot, D. A. (1966) Self-control and tolerance of noxious stimulation. *Psychological Reports* 18:79–85.
Kanfer, F. H. & Zich, J. (1974) Self-control training: The effects of external control on children's resistance to temptation. *Developmental Psychology* 10:108–15.
Kendall, P. C. (1977) On the efficacious use of verbal self-instructional procedures with children. *Cognitive Therapy and Research* 1:331–41.
Kendall, P. C. & Finch, A. J. (1976) A cognitive behavioral treatment for impulse control: A case study. *Journal of Consulting and Clinical Psychology* 44:852–57.
(1978) A cognitive-behavioral treatment for impulsivity: A group comparison study. *Journal of Consulting and Clinical Psychology* 46:110–18.
Killeen, P. R. (1982) Incentive theory. In: *Nebraska Symposium on Motivation*, ed. D. J. Bernstein. University of Nebraska Press.
(1984) Emergent behaviorism. *Behaviorism* 12(2):25–39.
(1985) Incentive theory: IV. Magnitude of reward. *Journal of the Experimental Analysis of Behavior* 43:407–17.
Killeen, P. R., Smith, J. P. & Hanson, S. J. (1981) Central place foraging in *Rattus norvegicus*. *Animal Behaviour* 29:64–70.
King, G. R. & Logue, A. W. (1987) Choice in a self-control paradigm with human subjects: Effects of changeover delay duration. *Learning and Motivation* 18:421–38.
(submitted) Choice in a self-control paradigm: Effects of reinforcer quality.
Krebs, J. R. & Davies, N. B., eds. (1984) *Behavioral ecology: An evolutionary approach* (2nd ed.). Sinauer.
Krebs, J. R. & Davies, N. B. (1987) *An introduction to behavioral ecology* (2nd ed.). Blackwell.
Krebs, J. R. & Kacelnik, A. (1984) Time horizons of foraging animals. In: *Timing and time perception*, ed. J. Gibbon & L. Allan. New York Academy of Sciences.
Krebs, J. R. & McCleery, R. H. (1984) Optimization in behavioural ecology. In: *Behavioural ecology: An evolutionary approach*, ed. J. R. Krebs & N. B. Davies. Sinauer.
Krebs, J. R., Stephens, D. W. & Sutherland, W. J. (1983) Perspectives in optimal foraging. In: *Perspectives in ornithology*, ed. A. H. Brush & G. A. Clark. Cambridge University Press.
Kuhl, J. (1984) Volitional aspects of achievement motivation and learned helplessness: Toward a comprehensive theory of action control. In: *Progress in experimental personality research*, vol. 13, ed. B. A. Maher. Academic Press.
Kuhl, J. & Kazen-Saad, M. (1988) A motivational approach to volition: Activation and deactivation of memory representations related to uncompleted intentions. In: *Cognitive perspectives on emotion and motivation*, ed. V. Hamilton, G. H. Bower & N. H. Frijda. Martinus Nijhoff.
Lattal, K. A. (1984) Signal functions in delayed reinforcement. *Journal of the Experimental Analysis of Behavior* 42:239–53.
Lavin, M. J., Freise, B. & Coombes, S. (1980) Transferred flavor aversions in adult rats. *Behavioral and Neural Biology* 28:15–33.
Lea, S. E. G. (1978) The psychology and economics of demand. *Psychological Bulletin* 85:441–66.
(1979) Foraging and reinforcement schedules in the pigeon: Optimal and non-optimal aspects of choice. *Animal Behaviour* 27:875–86.
(1981) Correlation and contiguity in foraging behaviour. In: *Predictability, correlation, and contiguity*, ed. P. Harzem & M. D. Zeiler. Wiley.
Levine, M. (1975) *A cognitive theory of learning: Research on hypothesis testing*. Wiley.
Lippman, L. G. & Meyer, M. E. (1967) Fixed interval performance as related to instructions and to subjects' verbalizations of the contingency. *Psychonomic Science* 8:135–36.
Logue, A. W. (1976) Individual differences in magnitude estimation of loudness. *Perception and Psychophysics* 19:279–80.
(1979a) Escape from noise and undermatching. *Psychological Record* 28:273–80.
(1979b) Taste aversion and the generality of the laws of learning. *Psychological Bulletin* 86:276–96.
(1982) Cognitive psychology's representation of behaviorism. *Behavioral and Brain Sciences* 3:381–82.
(1983) Signal detection and matching: Analyzing choice on concurrent variable-interval schedules. *Journal of the Experimental Analysis of Behavior* 39:107–27.
(1985a) Functional behaviorism: Where the pain is does not matter. *Behavioral and Brain Sciences* 8:66.
(1985b) The growth of behaviorism: Controversy and diversity. In: *Points of view in the modern history of psychology*, ed. C. Buxton. Academic Press.
(1985c) The origins of behaviorism: Antecedents and proclamation. In: *Points of view in the modern history of psychology*, ed. C. Buxton. Academic Press.
(1986) *The psychology of eating and drinking*. Freeman.

(1988) A comparison of taste aversion learning in humans and other vertebrates: Evolutionary pressures in common. In: *Evolution and learning*, ed. R. C. Bolles & M. D. Beecher. Erlbaum.

Logue, A. W. & Chavarro, A. (1987) The effect on choice of absolute and relative values of reinforcer delay, amount, and frequency. *Journal of Experimental Psychology: Animal Behavior Processes* 13:280–91.

Logue, A. W., Chavarro, A. & King, G. R. (submitted) *Impulsiveness and sensitivity to reinforcement in humans: Effects of the schedule of reinforcement.*

Logue, A. W., Chavarro, A., Rachlin, H. & Reeder, R. W. (1988) Impulsiveness in pigeons living in the experimental chamber. *Animal Learning & Behavior* 16:31–39.

Logue, A. W. & de Villiers, P. A. (1978) Matching in concurrent variable-interval avoidance schedules. *Journal of the Experimental Analysis of Behavior* 29:61–66.

Logue, A. W. & Mazur, J. E. (1981) Maintenance of self-control acquired through a fading procedure: Follow-up on Mazur and Logue (1978). *Behaviour Analysis Letters* 1:131–37.

Logue, A. W. & Pena-Correal, T. E. (1984) Responding during reinforcement delay in a self-control paradigm. *Journal of the Experimental Analysis of Behavior* 41:267–77.

(1985) The effect of food deprivation on self-control. *Behavioural Processes* 10:355–68.

Logue, A. W., Pena-Correal, T. E., Rodriguez, M. L. & Kabela, E. (1986) Self-control in adult humans: Variation in positive reinforcer amount and delay. *Journal of the Experimental Analysis of Behavior* 46:159–73.

Logue, A. W., Rodriguez, M. L., Pena-Correal, T. E. & Mauro, B. C. (1984) Choice in a self-control paradigm: Quantification of experience-based differences. *Journal of the Experimental Analysis of Behavior* 41:53–67.

Logue, A. W., Smith, M. E. & Rachlin, H. (1985) Sensitivity of pigeons to prereinforcer and postreinforcer delay. *Animal Learning & Behavior* 13:181–86.

Lowe, C. F. (1979) Determinants of human operant behavior. In: *Reinforcement and the organization of behavior*, ed. M. D. Zeiler & P. Harzem. Wiley.

(1983) Radical behaviorism and human psychology. In: *Animal models of human behavior*, ed. G. C. L. Davey. Wiley.

Lowe, C. F., Beasty, A. & Bentall, R. P. (1983) The role of verbal behavior in human learning: Infant performance on fixed-interval schedules. *Journal of the Experimental Analysis of Behavior* 39:157–64.

Lowe, C. F., Harzem, P. & Bagshaw, M. (1978) Species differences in temporal control of behavior II: Human performance. *Journal of the Experimental Analysis of Behavior* 29:351–61.

Lowe, C. F., Harzem, P. & Hughes, S. (1978) Determinants of operant behavior in humans: Some differences from animals. *Quarterly Journal of Experimental Psychology* 30:373–86.

Lowe, C. F. & Horne, P. J. (1985) On the generality of behavioural principles: Human choice and the matching law. In: *Behaviour analysis and contemporary psychology*, ed. C. F. Lowe, M. Richelle, D. E. Blackman & C. M. Bradshaw. Erlbaum.

Luria, A. R. (1961) *The role of speech in the regulation of normal and abnormal behavior*. Liveright.

(1982) *Language and cognition*. Wiley.

Maccoby, E. E. & Jacklin, C. N. (1974) *The psychology of sex differences*. Stanford University Press.

Mangel, M. & Clark, C. W. (1986) Towards a unified foraging theory. *Ecology* 67:1127–38.

Matthews, B. A., Catania, A. C. & Shimoff, E. (1985). Effects of uninstructed verbal behavior on nonverbal responding: Contingency descriptions versus performance descriptions. *Journal of the Experimental Analysis of Behavior* 43:155–64.

Matthews, B. A., Shimoff, E., Catania, A. C. & Sagvolden, T. (1977) Uninstructed human responding: Sensitivity to ratio and interval contingencies. *Journal of the Experimental Analysis of Behavior* 27:453–67.

Mawhinney, T. C. (1982) Maximizing versus matching in people versus pigeons. *Psychological Reports* 50:267–81.

Maynard Smith, J. (1978) Optimization theory in evolution. *Annual Review of Ecology and Systematics* 9:31–56.

Mazur, J. E. (1981) Optimization theory fails to predict performance of pigeons in a two-response situation. *Science* 214:823–25.

(1984) Tests of an equivalence rule for fixed and variable reinforcer delays. *Journal of Experimental Psychology: Animal Behavior Processes* 10:426–36.

(1986) Choice between single and multiple delayed reinforcers. *Journal of the Experimental Analysis of Behavior* 46:67–77.

(1987) An adjusting procedure for studying delayed reinforcement. In: *Quantitative analyses of behavior*, vol. 5, *The effect of delay and of intervening events on reinforcement value*, ed. M. L. Commons, J. E. Mazur, J. A. Nevin & H. Rachlin. Erlbaum.

Mazur, J. E. & Logue, A. W. (1978) Choice in a "self-control" paradigm: Effects of a fading procedure. *Journal of the Experimental Analysis of Behavior* 30:11–17.

Mazur, J. E., Stellar, J. R. & Waraczynski, M. (1987) Self-control choice with electrical stimulation of the brain as a reinforcer. *Behavioural Processes* 15:143–53.

McDiarmid, C. G. & Rilling, M. E. (1965) Reinforcement delay and reinforcement rate as determinants of schedule preference. *Psychonomic Science* 2:195–96.

McDowell, J. J. & Wood, H. M. (1984) Confirmation of linear system theory prediction: Changes in Herrnstein's *k* as a function of changes in reinforcer magnitude. *Journal of the Experimental Analysis of Behavior* 41:183–92.

(1985) Confirmation of linear system theory prediction: Rate of changes of Herrnstein's *k* as a function of response-force requirement. *Journal of the Experimental Analysis of Behavior* 43:61–73.

McNamara, J. M. & Houston, A. I. (1982) Short-term behaviour and lifetime fitness. In: *Functional ontogeny*, ed. D. McFarland. Pitman.

(1987) Foraging in patches: There's more to life than the marginal value theorem. In: *Quantitative analyses of behavior*. Vol. 6: *Foraging*, ed. M. L. Commons, A. Kacelnik & S. J. Shettleworth. Erlbaum.

(1987a) A general framework for understanding the effects of variability and interruptions on foraging behaviour. *Acta Biotheoretica* 36:3–22.

McReynolds, W. T., Green, L. & Fisher, E. B., Jr. (1983) Self-control as choice management with reference to the behavioral treatment of obesity. *Health Psychology* 2:261–76.

McSweeney, F. K. (1974) Variability of responding on a concurrent schedule as a function of body weight. *Journal of the Experimental Analysis of Behavior* 21:357–59.

(1975) Concurrent schedule responding as a function of body weight. *Animal Learning & Behavior* 3:264–70.

McSweeney, F. K., Melville, C. L. & Whipple, J. E. (1983) Herrnstein's equation for the rates of responding during concurrent schedules. *Animal Learning and Behavior* 11:275–89.

Menzel, E. W. (submitted) Chimpanzees (*Pan troglodytes*): Problem seeking versus the bird-in-hand, least effort strategy.

Menzel, E. W. & Wyers, E. J. (1981) Cognitive aspects of foraging behavior. In: *Foraging behavior: Ecological, ethological, and psychological approaches*, ed. A. C. Kamil & T. D. Sargent. Garland.

Millar, A. & Navarick, D. J. (1984) Self-control and choice in humans: Effects of video game playing as a positive reinforcer. *Learning and Motivation* 15:203–18.

Miller, D. T., Weinstein, S. M. & Karniol, R. (1978) Effects of age and self-verbalization on children's ability to delay gratification. *Developmental Psychology* 14:569–70.

Miller, H. L., Heiner, R. A. & Manning, S. W. (in press) Deciding between matching and maximizing: Data from pigeons and people. In: *Quantitative analyses of behavior*. Vol. 9: *Economic approaches to human and animal choice*, ed. M. L. Commons, R. J. Herrnstein & W. M. Vaughan. Erlbaum.

Mischel, H. N. & Mischel, W. (1983) The development of children's knowledge of self-control strategies. *Child Development* 54:603–19.

Mischel, W. (1966) Theory and research on the antecedents of self-imposed delay of reward. In: *Progress in experimental personality research*, ed. B. A. Maher. Academic Press.

(1973) Towards a cognitive social learning reconceptualization of personality. *Psychological Review* 80:252–83.

(1974) Processes in delay of gratification. In: *Advances in experimental social psychology*, ed. L. Berkowitz. Academic Press.

(1979) On the interface of cognition and personality. *American Psychologist* 34:740–54.

(1981a) Metacognition and the rules of delay. In: *Social cognitive development: Frontiers and possible futures*, ed. J. H. Flavell & L. Ross. Cambridge University Press.

(1981b) Objective and subjective rules for delay of gratification. In: *Cognition in human motivation and learning*, ed. G. d'Ydewalle & W. Lens. Erlbaum.

(1981c) *Introduction to personality*. Holt, Rhinehart & Winston.

(1983) Delay of gratification as process and as person variable in development. In: *Human development*, ed. D. Magnusson & V. L. Allen. Academic Press.

(1984) Convergences and challenges in the search for consistency. *American Psychologist* 39:351–64.

Mischel, W. & Baker, N. (1975) Cognitive appraisals and transformations in delay behavior. *Journal of Personality and Social Psychology* 31:254–61.
Mischel, W. & Ebbesen, E. B. (1970) Attention in delay of gratification. *Journal of Personality and Social Psychology* 16:329–37.
Mischel, W. & Grusec, J. (1967) Waiting for rewards and punishments: Effects of time and probability on choice. *Journal of Personality and Social Psychology* 5:24–31.
Mischel, W. & Moore, B. S. (1980) The role of ideation in voluntary delay for symbolically presented rewards. *Cognitive Therapy & Research* 4:211–21.
Mischel, W. & Peake, P. K. (1982) Beyond deja vu in the search for cross-situational consistency. *Psychological Review* 89:730–55.
Moore, B., Mischel, W. & Zeiss, A. (1976) Comparative effects of the reward stimulus and its cognitive representation in voluntary delay. *Journal of Personality and Social Psychology* 34:419–24.
Moore, J. (1979) Choice and number of reinforcers. *Journal of the Experimental Analysis of Behavior* 32:51–63.
(1982) Choice and multiple reinforcers. *Journal of the Experimental Analysis of Behavior* 37:115–22.
Morris, C. J. (1986) The effects of occasional short (FR 1) reinforcement ratios on choice behavior. *Psychological Record* 36:63–68.
Mowrer, O. H. (1939) A stimulus-response analysis of anxiety and its role as a reinforcing agent. *Psychological Review* 46:553–65.
Navarick, D. J. (1982) Negative reinforcement and choice in humans. *Learning and Motivation* 13:361–77.
(1985) Choice in humans: Functional properties of reinforcers established by instruction. *Behavioural Processes* 11:269–77.
(1986) Human impulsivity and choice: A challenge to traditional operant methodology. *Psychological Record* 36:343–56.
Navarick, D. J. & Chellsen, J. (1983) Matching versus undermatching in the choice behavior of humans. *Behaviour Analysis Letters* 3:325–35.
Navarick, D. J. & Fantino, E. (1976) Self-control and general models of choice. *Journal of Experimental Psychology: Animal Behavior Processes* 2:75–87.
Oaten, A. (1977) Optimal foraging in patches: A case for stochasticity. *Theoretical Population Biology* 12:263–85.
O'Leary, K. D. (1968) The effects of self-instruction on immoral behavior. *Journal of Experimental Child Psychology* 6:297–301.
Oscar-Berman, M., Heyman, G. M., Bonner, R. T. & Ryder, J. (1980) Human neuropsychology: Some differences between Korsakoff and normal operant performance. *Psychological Research* 41:235–47.
Patterson, C. J. & Mischel, W. (1975) Plans to resist distraction. *Developmental Psychology* 11:369–78.
Pierce, W. D. & Epling, W. F. (1984) On the persistence of cognitive explanation: Implications for behavior analysis. *Behaviorism* 12:15–27.
Pierce, W. D., Epling, W. F. & Greer, S. M. (1981) Human communication and the matching law. In: *Quantification of steady-state operant behaviour*, ed. C. M. Bradshaw, E. Szabadi & C. F. Lowe. Elsevier/North-Holland.
Pietrewicz, A. T. & Richards, J. B. (1985) Learning to forage: An ecological perspective. In: *Issues in the ecological study of learning*, ed. T. D. Johnston & A. T. Pietrewicz. Erlbaum.
Poling, A., Blakely, E., Pellettiere, V. & Picker, M. (1987) Choice between sequences of fixed-ratio schedules: Effects of ratio values and probability of food delivery. *Journal of the Experimental Analysis of Behavior* 47:225–32.
Pomerleau, O. F., Bass, F. & Crown, V. (1975) The role of behavior modification in preventive medicine. *New England Journal of Medicine* 292:1277–82.
Pomerleau, O. F., Fertig, J., Baker, L. & Cooney, N. (1983) Reactivity to alcohol cues in alcoholics and non-alcoholics: Implications for a stimulus control analysis of drinking. *Addictive Behaviors* 8:1–10.
Powers, W. T. (1973) *Behavior: The control of perception*. Aldine.
Pressley, M. (1979) Increasing children's self-control through cognitive interventions. *Review of Educational Research* 49:319–70.
Pulliam, H. R. (1974) On the theory of optimal diets. *American Naturalist* 108:59–74.
Pyke, G. H., Pulliam, H. R. & Charnov, E. L. (1977) Optimal foraging: A selective review of theory and tests. *Quarterly Review of Biology* 52:137–54.
Rachlin, H. (1982) Absolute and relative consumption space. In: *Nebraska Symposium on Motivation*, ed. D. J. Bernstein. University of Nebraska Press.
(1987) Animal choice and human choice. In: *Advances in behavioral economics*, vol. 1, ed. L. Green & J. H. Kagel. Ablex.
Rachlin, H., Battalio, R., Kagel, J. & Green, L. (1981) Maximization theory in behavioral psychology. *Behavioral & Brain Sciences* 4:371–417.
Rachlin, H., Castrogiovanni, A. & Cross, D. (1987) Probability and delay in commitment. *Journal of the Experimental Analysis of Behavior* 48:347–55.
Rachlin, H. & Green, L. (1972) Commitment, choice and self-control. *Journal of the Experimental Analysis of Behavior* 17:15–22.
Rachlin, H., Logue, A. W., Gibbon, J. & Frankel, M. (1986) Cognition and behavior in studies of choice. *Psychological Review* 93:33–45.
Rechten, C., Avery, M. & Stevens, A. (1983) Optimal prey selection: Why do great tits show partial preferences? *Animal Behaviour* 31:576–84.
Rehm, L. P. (1984) Self-management therapy for depression. *Advances in Behaviour Research & Therapy* 6:83–98.
Revusky, S. (1977) Learning as a general process with an emphasis on data from feeding experiments. In: *Food aversion learning*, ed. N. W. Milgram, L. Krames & T. M. Alloway. Plenum.
(1985) The general process approach to animal learning. In: *Issues in the ecological study of learning*, ed. T. D. Johnston & A. T. Pietrewicz. Erlbaum.
Rodin, J. (1981) Current status of the internal-external hypothesis for obesity. *American Psychologist* 36:361–72.
Rodriguez, M. L. & Logue, A. W. (1986) Independence of the amount and delay ratios in the generalized matching law. *Animal Learning & Behavior* 14:29–37.
(1988) Adjusting delay to reinforcement: Comparing choice in pigeons and humans. *Journal of Experimental Psychology: Animal Behavior Processes* 14:105–17.
Rodriguez, M. L. & Mischel, W. (1987) *Cognitive strategies and delay of gratification in older impulsive children*. Paper presented at the Annual Meeting of the American Psychological Association, New York, N.Y.
Roitblat, H. L. (1982) The meaning of representation in animal memory. *Behavioral and Brain Sciences* 5:353–406.
Sarafino, E. P., Russo, A., Barker, J., Consentino, A. M. & Titus, D. (1982) The effect of rewards on intrinsic interest: Developmental changes in the underlying processes. *Journal of Genetic Psychology* 141:29–39.
Scheier, M. F. & Carver, C. S. (1988) A model of behavioral self-regulation: Translating intention into action. In: *Advances in experimental social psychology*, vol. 21, ed. L. Berkowitz. Academic Press.
Schiffman, H. R. (1982) *Sensation and perception: An integrated approach*. Wiley.
Schmitt, D. R. (1974) Effects of reinforcement rate and reinforcer magnitude on choice behavior of humans. *Journal of the Experimental Analysis of Behavior* 21:409–19.
Schneider, J. W. (1973) Reinforcer effectiveness as a function of reinforcer rate and magnitude: A comparison of concurrent performances. *Journal of the Experimental Analysis of Behavior* 20:461–71.
Schoener, T. W. (1971) Theory of feeding strategies. *Annual Review of Ecology and Systematics* 2:369–404.
(1979) Generality of the size-distance relation in models of optimal feeding. *American Naturalist* 114:902–14.
Schwarz, J. C., Schrager, J. B. & Lyons, A. E. (1983) Delay of gratification by preschoolers: Evidence for the validity of the choice paradigm. *Child Development* 54:620–25.
Shepard, R. N. (1984) Ecological constraints on internal representation: Resonant kinematics of perceiving, imagining, thinking, and dreaming. *Psychological Review* 91:417–47.
Shimoff, E., Catania, A. C. & Matthews, B. A. (1981) Uninstructed human responding: Sensitivity of low rate performance to schedule contingencies. *Journal of the Experimental Analysis of Behavior* 36:207–20.
Shull, R. L., Spear, D. J. & Bryson, A. E. (1981) Delay or rate of food delivery as a determiner of response rate. *Journal of the Experimental Analysis of Behavior* 35:129–43.
Skinner, B. F. (1953) *Science and human behavior*. Free Press.
(1974) *About behaviorism*. Knopf.
(1984) Coming to terms with private events. *Behavioral and Brain Sciences* 7:572–81.
Snyderman, M. (1983a) Delay and amount of reward in a concurrent chain. *Journal of the Experimental Analysis of Behavior* 39:437–47.
(1983b) Optimal prey selection: The effects of food deprivation. *Behaviour Analysis Letters* 3:359–69.
Solnick, J. V., Kannenberg, C. H., Eckerman, D. A. & Waller, M. B. (1980) An experimental analysis of impulsivity and impulse control in humans. *Learning and Motivation* 11:61–77.
Sonuga-Burke, E. J. S., Lea, S. E. G. & Webley, P. (in press a) Adaptivity and time discounting in intertemporal choice. In: *Quantitative analysis of Behavior*, vol. 9, *Behavioral economics*, ed. M. L. Commons, R. J. Herrnstein, J. C. Cross & W. Vaughan. Erlbaum.

(in press b) The development of adaptive choice in a self-control paradigm. *Journal of the Experimental Analysis of Behavior.*

Staddon, J. E. R., ed. (1980) *Limits to action: The allocation of individual behavior.* Academic Press.

(1983) *Adaptive behavior and learning.* Cambridge University Press.

Staddon, J. E. R. & Reid, A. K. (1987) Adaptation to reward. In: *Foraging behavior*, ed. A. C. Kamil, J. R. Krebs & H. R. Pulliam. Plenum.

Stephens, D. W. (1981) The logic of risk-sensitive foraging preferences. *Animal Behaviour* 29:628–29.

Stephens, D. W. & Charnov, E. L. (1982) Optimal foraging: Some simple stochastic models. *Behavioral Ecology and Sociobiology* 10:251–63.

Stephens, D. W. & Krebs, J. R. (1986) *Foraging theory.* Princeton University Press.

Stephens, D. W., Lynch, J. F., Sorensen, A. E. & Gordon, C. (1986) Preference and profitability: Theory and experiment. *American Naturalist* 127:533–53.

Stevens, S. S. (1975) *Psychophysics.* Wiley.

Stubbs, D. A. & Pliskoff, S. S. (1969) Concurrent responding with fixed relative rate of reinforcement. *Journal of the Experimental Analysis of Behavior* 12:887–95.

Takahashi, M. & Iwamoto, T. (1986) Human concurrent performances: The effects of experience, instructions, and schedule correlated stimuli. *Journal of the Experimental Analysis of Behavior* 45:257–68.

Terrace, H. S. (1966) Stimulus control. In: *Operant behavior: Areas of research and application*, ed. W. K. Honig. Prentice-Hall.

Thomas, G. (1981) Contiguity, reinforcement rate and the law of effect. *Quarterly Journal of Experimental Psychology* 33B:33–43.

(1983) Contiguity and contingency in instumental conditioning. *Learning and Motivation* 14:513–26.

Timberlake, W. (1983) The functional organization of appetitive behavior: Behavior systems and learning. In: *Advances in the analysis of behavior:* Vol. 3. *Biological factors in learning*, ed. M. D. Zeiler & P. Harzem.

(1984) A temporal limit on the effect of future food on current performance in an analogue of foraging and welfare. *Journal of the Experimental Analysis of Behavior* 41:117–24.

(1986) Unpredicted food produces a mode of behavior that affects rats' subsequent reactions to a conditioned stimulus: A behavior system approach to "context blocking." *Animal Learning and Behavior* 14:276–86.

Timberlake, W., Gawley, D. J. & Lucas, G. A. (1987) Time horizons in rats foraging for food in temporally separated patches. *Journal of Experimental Psychology: Animal Behavior Processes* 13:302–9.

Timberlake, W. & Lucas, G. A. (1985) The basis of superstitious behavior: Response contingency, stimulus substitution, or appetitive behavior? *Journal of the Experimental Analysis of Behavior* 44:279–99.

(in press) Behavior systems and learning: From misbehavior to general principles. In: *Contemporary learning theories: Instrumental conditioning theory and the impact of biological constraints on learning*, ed. S. B. Klein & R. R. Mowrer. Erlbaum.

Tinbergen, N. (1951) *The study of instinct.* Oxford University Press.

(1953) *The herring gull's world.* Collins.

Todorov, J. C. (1973) Interaction of frequency and magnitude of reinforcement on concurrent performances. *Journal of the Experimental Analysis of Behavior* 19:451–58.

Toner, I. J., Lewis, B. C. & Gribble, C. M. (1979) Evaluative verbalization and delay maintenance behavior in children. *Journal of Experimental Child Psychology* 28:205–10.

Toner, I. J. & Smith, R. A. (1977) Age and overt verbalization in delay-maintenance behavior in children. *Journal of Experimental Child Psychology* 24:123–28.

Turelli, M., Gillespie, J. H. & Schoener, T. W. (1982) The fallacy of the fallacy of the averages in ecological optimization theory. *American Naturalist* 119:879–84.

van Haaren, F., van Hest, A. & van de Poll, N. E. (1988) Self-control in male and female rats. *Journal of the Experimental Analysis of Behavior* 49:201–211.

Vygotsky, L. S. (1962) *Thought and language.* MIT Press.

(1978) *Mind in society.* Harvard University Press.

Walsh, R. P. (1967) Sex, age, and temptation. *Psychological Reports* 21:625–29.

Wasserman, E. A. (1983) Is cognitive psychology behavioral? *Psychological Record* 33:3–30.

Wearden, J. H. (1980) Undermatching on concurrent variable-interval schedules and the power law. *Journal of the Experimental Analysis of Behavior* 33:149–52.

Wiest, W. M. & Bell, B. (1985) Stevens's exponent for psychophysical scaling of perceived, remembered, and inferred distance. *Psychological Bulletin* 98:457–70.

Williams, B. A. (1986) On the role of theory in behavior analysis. *Behaviorism* 14:111–24.

Williams, B. A. & Fantino, E. (1978) Effects on choice of reinforcement delay and conditioned reinforcement. *Journal of the Experimental Analysis of Behavior* 29:77–86.

Wilson, E. O. (1975) *Sociobiology.* Harvard Univeristy Press.

Wilson, G. T. & O'Leary, K. D. (1980) *Principles of behavior therapy.* Prentice-Hall.

Wilson, J. Q. & Herrnstein, R. J. (1985) *Crime and human nature.* Simon and Schuster.

Wong, P. T. P., Traupmann, K. L. & Brake, S. (1974) Does delay of reinforcement produce durable persistence? *Quarterly Journal of Experimental Psychology* 26:218–28.

Wong, R. (1984) Hoarding versus the immediate consumption of food among hamsters and gerbils. *Behavioural Processes* 9:3–11.

Yamamura, N. & Tsuji, N. (1987) Optimal patch time under exploitative competition. *American Naturalist* 129:553–67.

Yates, B. T. & Mischel, W. (1979) Young children's preferred attentional strategies for delaying gratification. *Journal of Personality and Social Psychology* 37:286–300.

Zabludoff, S. D., Wecker, J. & Caraco, T. (1988) Foraging choice in laboratory rats: Constant vs. variable delay. *Behavioural Processes* 16:95–110.

BODY AND BRAIN
A Trophic Theory of Neural Connections

DALE PURVES

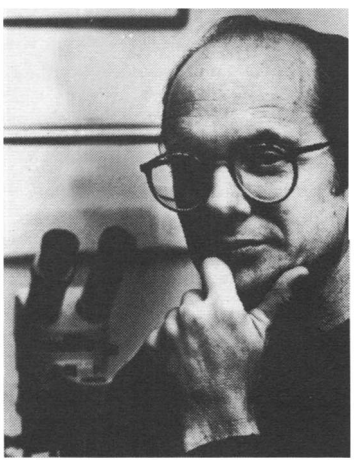

Leading neurobiologist Dale Purves presents the theory of trophic effects within the historical setting of earlier ideas about neural organization. In addition to illuminating eighty years of work on trophic interactions, this book also asks its own compelling questions: Are trophic interactions characteristic of all animals? Are they related to learning? What do they imply about the view that the nervous system operates according to Darwinian principles?
$35.00 cloth

CEREBRAL DOMINANCE
The Biological Foundations

EDITED BY
NORMAN GESCHWIND AND
ALBERT M. GALABURDA

"This book is exacting. It requires to be read, not skimmed. The text is conceptually stimulating.... Geschwind was undoubtedly one of the most scholarly and creative behavioural neurologists of our epoch. Above all, he was a catalyst. This book should trigger further conceptual and technical advances in the field."
—Freda Newcombe, *Quarterly Journal of Experimental Psychology*
$12.95 paper

VYGOTSKY AND THE SOCIAL FORMATION OF MIND

JAMES V. WERTSCH

"Wertsch presents the reader with what amounts to a sort of intellectual history of an individual of remarkable breadth and insight and, in doing so, has revealed himself to be a first-rate scholar as well."—James Gavelek, *Journal of Reading Behavior*

"[Wertsch's] scholarship is exemplary: the book is the most detailed account in English of its subject's life and work."
—P.N. Johnson-Laird, *Times Literary Supplement*
$12.95 paper

MANUSCRIPT LECTURES

WILLIAM JAMES
INTRODUCTION BY
IGNAS K. SKRUPSKELIS

This final volume of *The Works of William James* provides a full record of James's teaching career at Harvard from 1872 to 1907. It includes extensive working notes for lectures in more than twenty courses. Some of the notes contain summary statements of James's views that have never been published before; others reflect contemporary controversies in philosophy; still others illuminate early stages of James's thinking on crucial problems in what was to become his philosophy of radical empiricism.
The Works of William James
$70.00 cloth

MIND CHILDREN
The Future of Robot and Human Intelligence

HANS MORAVEC

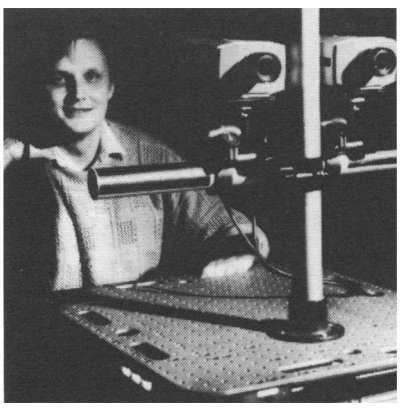

Written by the roboticist Hans Moravec (Director of the Mobile Robot Laboratory of Carnegie-Mellon University), this book offers a mind-boggling glimpse of a world we may soon share with our artificial progeny. Moravec argues that within fifty years, we will achieve human equivalence in our machines, not only in their capacity to reason, but also in their ability to perceive, interact with, and change their environment.

"Hans Moravec is a visionary, and though some of his dreams may strike the reader as nightmares they are no less fascinating for that."—Richard Dawkins

"Moravec is one of the most original thinkers in the field of artificial intelligence....This is as stimulating a book as I've read in a long while."—Pamela McCorduck
$18.95 cloth

Harvard University Press
79 Garden Street
Cambridge, MA 02138

75th · 350th ANNIVERSARY